GARLAND

GF24-G24T

600mm WIDE RESTAURANT SERIES GRIDDLE MODULAR TOP

The Garland Heavy Duty Restaurant Series is a commercial range that has been engineered for unmatched performance and durability.

All of the burners in the range are made of cast-iron for better heat retention and lasting durability.

Featuring stainless steel construction with a large front 127mm 'plate rail' and backguard that matches the other Restaurant Series units giving a sleek clean finish.

Premium 15mm thick griddle with powerful cast iron 'H' burners for even heat distribution. Large 686mm deep work surface. Item GF24-G24T is a 600mm griddle modular top model.

Large easy-to-use control knobs sit flush to the 'plate rail' and the unit can sit on top of the optional stainless steel stand with storage shelf.

GF24-G24T pictured with optional stand

STANDARD FEATURES

- Piezo ignition for all concealed burners
- 108mm wide grease trough
- Gas regulator
- Set 4 legs for countertop mounting
- Available in Natural or Propane Gas

OPTIONAL FEATURES

- Stainless steel stand with shelf and adjustable feet - MS-G24
- Swivel Fixed Height Castors for stand - legs must be shortened by 100mm - MS-CSTR (non brake), MS-CSTRB (brake)
- Grooved Griddle in 300mm sections - Specify -GRV
- Flexible gas hose with quick disconnect and restraining kit - 432018-1200HK

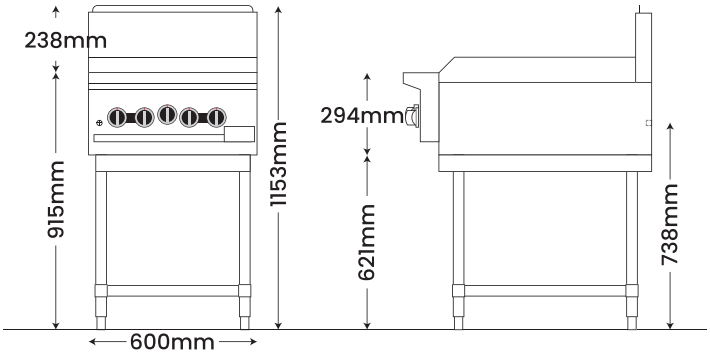

DIMENSIONS

External Dimension: 600W x 876D x 1153H (with stand) mm

Working height : 915mm

Griddle : 600W x 585D mm

Combustible wall clearance: Side: 152mm, Rear: 152mm

TECHNICAL DATA

Gas Type: Natural or Propane

Total Output:	Natural 38MJ	Propane 38MJ
Burner Ratings: Griddle per 300mm	Natural 19MJ	Propane 18MJ

Gas Connection: ¾"

SHIPPING DATA

Shipping Weight: 84kg

Shipping Dimensions: 737W x 1041D x 574H mm

AGA APPROVAL NUMBER

AGA 7455 G
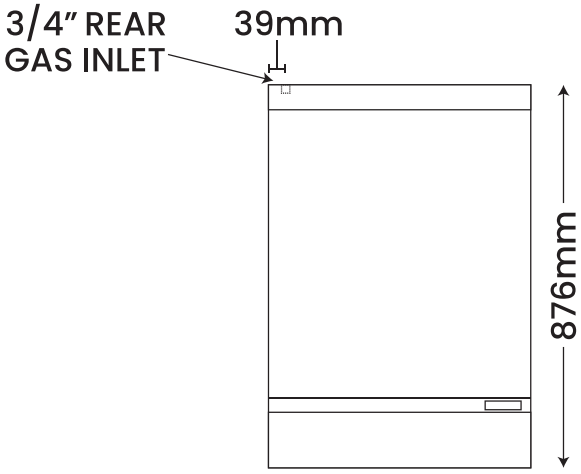
SPECIFICATIONS ARE SUBJECT TO CHANGE WITHOUT NOTICE.