Data Sheet

iVario® Pro XL

Capacity
> 150 liters effective volume
> 59 dm^2 cooking surface

Manual mode
> Boiling: 30 °C – boiling temperature
> Pan frying: 30 °C – 250 °C
> Deep-frying: 30 °C – 180 °C

iVario

The iVario is one of the most modern cooking systems for maximum productivity, flexibility and simplicity when boiling, frying, deep-frying and pressure cooking, and therefore replaces almost all conventional cooking appliances. Its unique heating technology offers maximum power and precision, and thanks to its intelligent cooking assistants, who thinks and supports you to achieve outstanding food quality every time, without any monitoring or checking. Up to 4 times as fast, with up to 40% less energy and a huge space gain compared to conventional cooking appliances. This means that an iVario will pay for itself within just a few months.

Intelligent assistants

iVarioBoost iCookingSuite iZoneControl

iVarioBoost
iVarioBoost is the patented heating technology made from ceramic heating elements, which are connected with the fast-response, scratch-resistant high-performance pan base. Therefore, the iVario heats the pan evenly to 200 °C (392 °F) in less than 2.5 minutes and quickly reduces its temperature, if necessary.
At the same time, there is enough reserve capacity available to quickly absorb temperature fluctuations when searing large quantities or pouring in liquid. For you this means maximum performance, but also no sticking or boiling over. The device delivers great results and boosts productivity by as much as fourfold, while reducing cooking losses by 17 % and energy consumption by 40 %.

iCookingSuite
The iCookingSuite is your intelligent cooking assistance for the iVario, providing ease of use and the greatest possible support for cooking. Intelligent sensors in the pan base recognise the load size, the condition and size of the food, and continually adjust the cooking process. As soon as you need to take some action, the iCookingSuite will let you know. For you this means full reliability and a high standard of quality. At the same time, you save on monitoring, time, raw materials and energy.

iZoneControl
With iZoneControl, you can divide the pan base into individual heating zones and operate them with different temperatures or cooking paths. Areas that are not in use are not heated. This makes one big iVario into four little iVarios. You specify the desired result and start the cooking sequence for the desired zones. As the iZoneControl makes suggestions as to which zone is best for your foods, you can work even more efficiently, and save time and energy. For you, this means high flexibility, time savings and always having everything under control.

Programming mode
With the programme management, manual programmes can be intuitively created and intelligent cooking paths can be saved and clearly managed with their customised settings.

, Version 22 - 17/09/2020 2:00 PM - We reserve the right to make technical changes.

Unit description and functional features

Intelligent functions
> Intelligent energy and temperature management with high power reserves and accurate heat distribution over the entire pan surface area
> Intelligent cooking path control for automatic adaptation of the cooking process to the defined desired result e.g. browning and degree of cooking to achieve this safely and efficiently, regardless of the operator, the amount of food to be cooked and the loaded volume
> Intelligent, automatic lifting of boiling and deep-frying baskets for perfect cooking results, optimal ergonomics and resource efficiency
> Accurate monitoring and calculation to reproduce optimal cooking results
> Interrupt intelligent cooking paths or switch intelligent cooking in à la carte mode for maximum flexibility
> Individual, intuitive programming by drag-and-drop of up to 1,200 cooking programmes with up to 12 steps
> Simple transfer of programs to other cooking systems via a secure cloud connection with ConnectedCooking or USB flash drive.
> Self-learning operation that adapts to usage behaviour, such as the intelligent sorting of frequently used recipes
> Automatic resumption and optimal completion of a cooking sequence after power failures

Cooking functions (with automatic start time)
> Core temperature probe with 6 measuring points, magnetic core probe holder and an ergonomic handle as well as automatic error correction in the event of incorrect readings
> Automatic water fillling with accuracy to one liter (units can be set in liters or gallons)
> Direct emptying of cooking or cleaning water through the integrated pan drain (without tipping over, without floor drain)
> Pan can be moved with electric cylinders, controlled via the display
> Fast-response, scratch-resistant high performance pan base
> Integrated hand shower with automatic retraction system and switchable spray and single jet function
> Integrated country-specific socket (for voltages with neutral conductor)
> Delta-T cooking for particularly gentle preparation with minimal cooking losses
> Digital temperature display, can be set in °C or °F, display of target and actual values
> 24 hour real time clock with automatic switching to and from daylight savings when connected with ConnectedCooking
> Automatic pre-selected starting time with variable date and time
> Adjustable display language
> Digital timer 0-24 hours with permanent settings, optional setting in hr/min or min/sec.
> 24 hour real time clock
> Free hotline for technical and application enquiries (ChefLine)

Cooking functions
> Core temperature probe with 6 measuring points, magnetic core probe holder and an ergonomic handle as well as automatic error correction in the event of incorrect readings
> Automatic water fillling with accuracy to one liter (units can be set in liters or gallons)
> Direct emptying of cooking or cleaning water through the integrated pan drain (without tipping over, without floor drain)
> Pan can be moved with electric cylinders, controlled via the display
> Fast-response, scratch-resistant high performance pan base
> Integrated hand shower with automatic retraction system and switchable spray and single jet function
> Integrated country-specific socket (for voltages with neutral conductor)
> Delta-T cooking for particularly gentle preparation with minimal cooking losses
> Digital temperature display, can be set in °C or °F, display of target and actual values
> 24 hour real time clock with automatic switching to and from daylight savings when connected with ConnectedCooking
> Adjustable display language
> Digital timer 0-24 hours with permanent settings, optional setting in hr/min or min/sec.
> 24 hour real time clock
> Free hotline for technical and application enquiries (ChefLine)

Pressure cooking (optional)
> The pressure cooking option enables faster and yet still gentle cooking of a wide range of different dishes. A uniform and optimal pressure level is guaranteed which preserves the cell structure of the food. This is a reliable and low maintenance system. Maximum overpressure: 300 mbar.

Networking
> Integrated WiFi interface for wireless connection to the cloud-based networking solution ConnectedCooking (depending on country-specific regulations)
> Integrated Ethernet interface for wired connection to the cloud-based networking solution ConnectedCooking
> Integrated USB interface for local data exchange
> Central unit management, recipe, shopping cart and program management, HACCP data management, maintenance management via ConnectedCooking

Occupational and operational safety
> Direct emptying of cooking or cleaning water through the integrated pan drain (without tipping over, without floor drain)
> Operating and warning display, e.g. hot oil when deep-frying
> Electronic safety temperature limiter
> Touch temperature of the pan covering maximum 73 °C (163 °F)
> HACCP data storage and output via USB or optional storage and management in the cloud-based networking solution ConnectedCooking
> Cooking system approved for unsupervised operation (e.g. overnight cooking)
> Integrated screen lock function to prevent accidental operation
> Additional safety when the pan is raised by motor

, Version 22 - 17/09/2020 2:00 PM - We reserve the right to make technical changes.

Installation, maintenance and environment

> Cold water connection (incl. water supply hose 1.5 m (59 in))
> Fixed waste water connection conforming to SVGW requirements is permitted
> Can be operated without water softening system
> Setup without a floor drain possible
> Splash-proof and hose-proof to IPX 5
> Adjustable to the installation location (height above sea level)
> Can be installed flush with the floor and wall
> Service diagnosis system with an automatic indicator of service messages and a self-test function for active assessment of unit functions.
> Remote diagnosis with ConnectedCooking by certified RATIONAL service partners
> Professional installation by certified technicians recommended by RATIONAL
> Regular maintenance is recommended. Maintenance according to the manufacturer's recommendations is available from RATIONAL service partners
> 2 year RATIONAL guarantee* (includes parts, work and journey)
> Energy efficiency tested in accordance with DIN 18873 and consumption values published in the HKICert database (http://grosskuechen.cert.hki-online.de)
> * Terms and conditions apply, see manufacturer's guarantee policy (https://www.rational-online.com/de_de/customerservice/rational_hersteller_garantieerklaerung.php)

Operation

> 10.1" TFT colour display and high-resolution, capacitive touchscreen with self-explanatory symbols for simple, intuitive operation using simple touch gestures
> Central dial with push function for intuitive selection and confirmation of entries
> Acoustic prompt and visual display when user intervention is required
> Application and operating instructions can be accessed on the unit display according to the action
> The height-adjustable substructure (optional) is easily operated using the unit display
> More than 44 languages are configurable for the user interface and help function
> Specially adapted cooking parameters for international or country-specific dishes can be selected and started, regardless of the language set for the unit
> Comprehensive search function with the search assistant in all help content
> Display of help content with a link to the content as well as starting application examples directly from the help function
> Easy selection of cooking paths using cooking methods
> Simple multi-level programming, manual cooking parameters with the building block approach with drag & drop function
> Cockpit function to display information about the process of a cooking path
> Customisation and control function of user profiles and access rights to prevent operator errors

Cleaning and care

> Material inside and outside stainless steel
> Hygienic, floor-level installation for easy, safe cleaning when installing on a base (optional)
> Airtight hygiene pan with rounded corners (NSF approved)
> Easy and safe cleaning of the glass and stainless steel surfaces, as well as splash-proof and hose-proof to IPX 5

, Version 22 - 17/09/2020 2:00 PM - We reserve the right to make technical changes.

Technical specifications

Notes

Specific national and regional standards and regulations which concern the installation and operation of commercial cooking appliances must be complied with. (IEC364 or country-specific version of IEC364)

Dimensions without substructure

Effective volume pan	150 l
Pan volume [WxDxH]	1,026 mm x 570 mm x 280 mm
Pan area	59 dm^2
Maximum cold oil	45 l
Width	1,365 mm
Depth	894 mm
Height (unit alone, closed lid)	608 mm
Minimum height (closed lid) (with stand unit)	1,078 mm
Maximum height (closed lid) (with electric height adjustment +175 / -25 mm)	1,253 mm
Minimum height (with open lid) (with stand unit)	1,735 mm
Maximum height (open lid) (with electric height adjustment +175 / -25 mm)	1,935 mm
Net weight	236 kg
Gross weight	279 kg
Net weight (with pressure option)	263 kg
Gross weight (with pressure option)	306 kg

Connection requirements water

Water supply (pressure hose)	¾“
Water pressure (flow pressure)	150 kPa (1.5 bar) – 600 kPa (6 bar)
Drain	DN 50

Connection requirements exhaust air

	Recommended exhaust air output* (air volume required device free in the room)	Latent heat load	Sensible heat emission
3NAC 415V	2,444 m^3/h	11,132 W	1,386 W

*In normal operation in accordance with VDI 2052. Application mix 60% boiling, 38% frying, 2% deep-frying. Consult RATIONAL prior to designing the ventilation system in case of different operating conditions

Connection requirements electric

Voltages (50/60 Hz)	Output	**Fuse protection	Conductor cross-section**
3NAC 415V	44 kW	63 A	10 mm^2
Maximal socket power	2.3 kW (10 A)		

**The values shown are for a maximum cable length of 2 m. Adjust these values according to the length of cable that will be used.

Minimum clearances during installation

	Left	Back	Right
Standard	50 mm	0	0
To heat source	350 mm	350 mm	350 mm
To open fire	500 mm	500 mm	500 mm
To open water when deep frying	900 mm	900 mm	900 mm

, Version 22 - 17/09/2020 2:00 PM - We reserve the right to make technical changes.

Options

> Pressure cooking
> Capability to connect to an energy optimisation system
> Blocked deep-frying mode
> Special voltages
> Without hand shower
> Without WiFi module
> Socket protected with earth leakage protection (for voltages with neutral conductor)
> Without socket

Certifications

, Version 22 - 17/09/2020 2:00 PM - We reserve the right to make technical changes.

Accessories

> Scraper
> Stir spatula
> Scoops
> Arm for automatic raising/lowering
> Boiling and deep frying basket
> Colander
> Pan base rack
> Spaetzle colander
> VarioMobil
> Basket cart
> Oil cart
> Wall attachement kit
> Kit for floor fastening
> Cleaning kit
> Waste water unit connection kit

, Version 22 - 17/09/2020 2:00 PM - We reserve the right to make technical changes.

Technical drawings

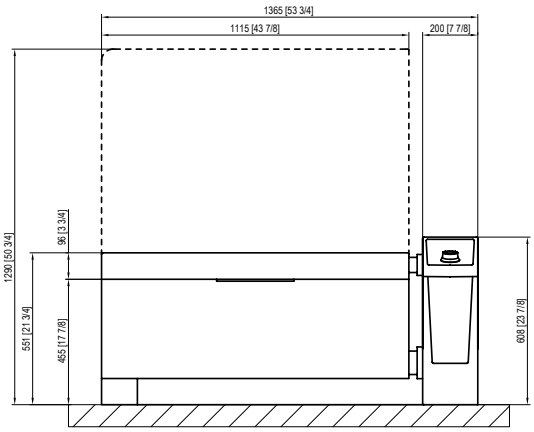

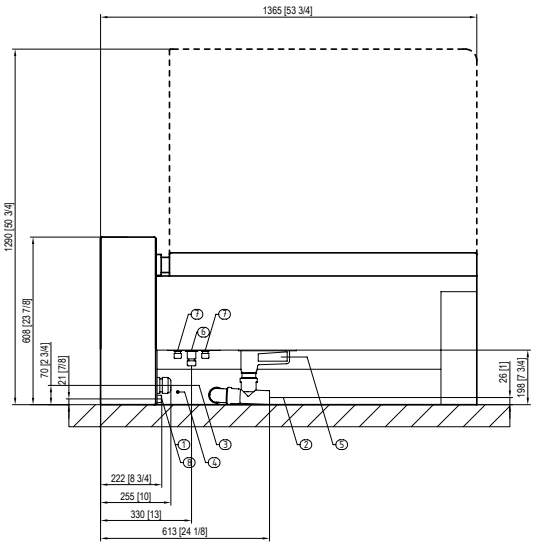

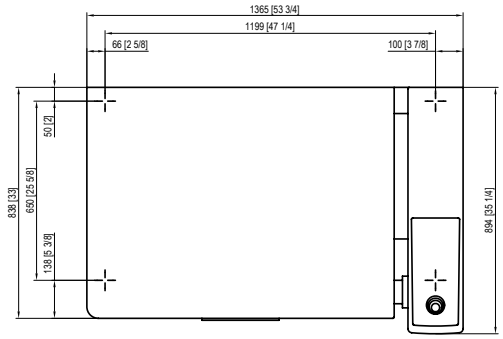

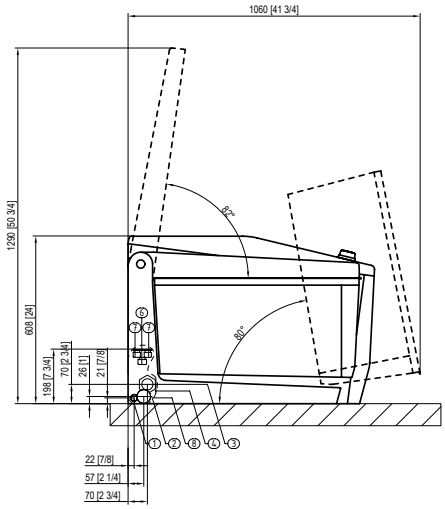

1	Water supply cold	5	Safety overflow (no connection)
2	Drain	6	Ethernet interface (option)
3	Electrical connection	7	Options connections
4	Equipotential bonding		

Planner	RATIONAL AUSTRALIA PTY LTD
	156 Swann Drive, Derrimut, VIC, 3026 Tel. +61 3 8369 4600 Fax: +61 3 8369 4699 E-Mail: sales@rationalaustralia.com.au Visit us on the internet: www.rationalaustralia.com.au

, Version 22 - 17/09/2020 2:00 PM - We reserve the right to make technical changes.