POLAR2-95-ACS-AUTOLID

VACUUM PACKAGING MACHINE

The robust, stainless steel POLAR2-95-ACS-AUTOLID vacuum packaging machine is standard equipped with a Busch vacuum pump. This double chamber complies with CE standards.

STANDARD FEATURES

- Pump capacity: 300 m3/h Busch pump
- Standard with 2 seal bars (front-back): 2 x 1100 mm. Optional without extra costs: 2 seal bars (left-right): 2 x 850 mm
- Standard double seal (two wires)
- Silicone holders easily removable for cleaning and maintenance purposes
- Pump maintenance and cleaning program
- Machine cycle: 15-40 sec
- Soft Air to protect the product and vacuum bag
- Sensor control
- Flat work plate
- Automatic Lid
- Foot pedal for semi-automatic operation
- Advanced Control System (ACS) offering 20 personalised programs including:
  - Liquid Control (set and forget)
  - Marinating
  - Tenderising
  - Red Meat
  - Sequential Vacuum
  - Jar sealing
- Insert plates included for a faster cycle and product adjustment
- IP-65 Rating
- Service kit for standard maintenance included

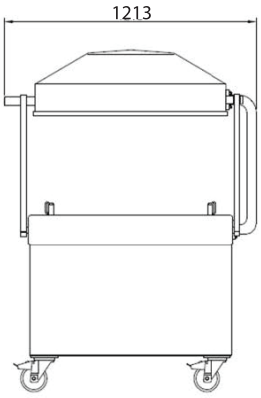

OPTIONAL FEATURES

- 1-2 Cut-off/Bi-active seal
- 3 seal bars (front, center, back): 3 x 1100 mm
- Cut off seal
- Wide seal (10mm)
- Gas flush (incl. pressed air connection)
- Preparation for external pump
- Heating element for vacuum valve
- Easy Swing Lid
- Extra seal capacity

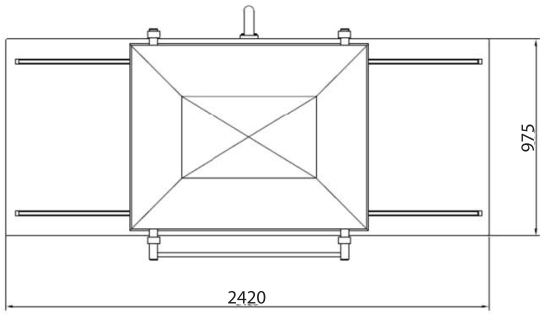

ACCESSORIES

- Zebra ZD410 thermal label printer (only in combination with ACS models)
- Inclined insert plate(for vacuum packing liquids and powders)

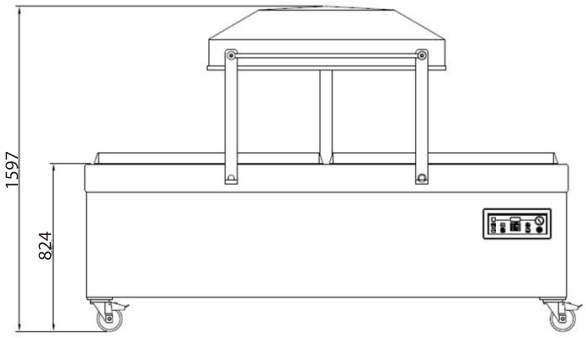

DIMENSIONS

External Dimension: 2420W x 1213D x 1597H mm

Chamber (usable space): 730W x 1100D x 280H mm

TECHNICAL DATA

Voltage (Hz): 3NAC 400V 50Hz

Pump Capacity (m^3/h): 300

Power (kW): 5.5

Weight: 767kg

RCM Approved:

SPECIFICATIONS ARE SUBJECT TO CHANGE WITHOUT NOTICE.

Busch vacuum pumps, world leaders in vacuum pump technology.

Two years parts & labour warranty

www.comcater.com.au contactus@comcater.com.au