POLAR2-85-ACS

VACUUM PACKAGING MACHINE

The robust, stainless steel POLAR2-85-ACS vacuum packaging machine is standard equipped with a Busch vacuum pump.

STANDARD FEATURES

- Standard with 2 seal bars (front-back): 2 x 840 mm
- Standard double seal (two wires)
- Silicone holders easily removable for cleaning and maintenance purposes
- Pump capacity: 300 m3/h Busch vacuum pump
- Pump maintenance and cleaning program
- Machine cycle: 10-30 sec
- Soft Air to protect the product and vacuum bag
- Sensor control
- Flat work plate
- Advanced Control System (ACS) offering 20 personalised programs including:
  - Liquid Control (set and forget)
  - Marinating
  - Tenderising
  - Red Meat
  - Sequential Vacuum
  - Jar Sealing
- Insert plates included for a faster cycle and product adjustment
- Stainless steel exterior
- IP-65 Rating
- Service kit for standard maintenance included

OPTIONAL FEATURES

- 1-2 Cut-off/Bi-active seal
- Automatic lid
- Cut off seal
- Wide seal (10mm)
- High lid 300 mm, with seal bars 2 x 770 mm
- Gas flush (incl. pressed air connection)
- Preparation for external pump
- Heating element for vacuum valve

ACCESSORIES

- Zebra ZD410 thermal label printer (only in combination with ACS)
- Inclined insert plate (for vacuum packing liquids and powders)

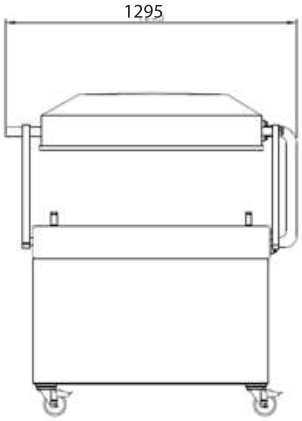

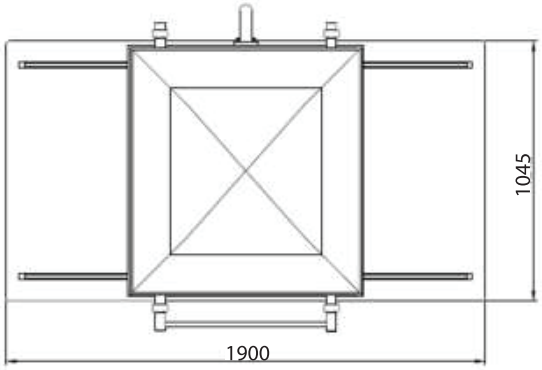

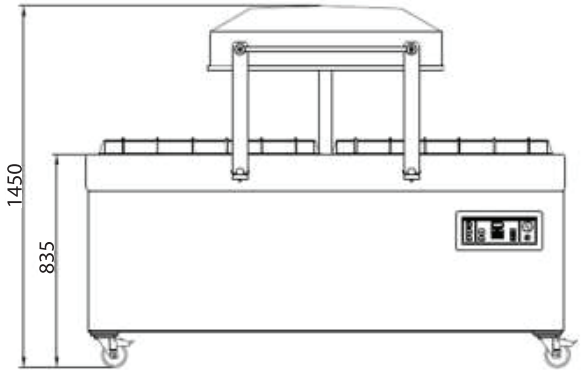

DIMENSIONS

External Dimension: 1900W x 1295D x 1450H mm

Chamber (usable space): 830W x 840D x 255H mm

TECHNICAL DATA

Voltage (Hz): 3NAC 400V 50Hz

Pump Capacity (m^3/h): 300

Power (kW): 5.5

Weight: 685kg

RCM Approved:

SPECIFICATIONS ARE SUBJECT TO CHANGE WITHOUT NOTICE.

www.comcater.com.au contactus@comcater.com.au

MA005A Purevac POLAR2-85-ACS Specification Sheet Issue 002 | Issue Date: 29/05/2023