File Ref : R:\\Released\WL005_27940

Sheet1 (Default)

Limits unless otherwise stated:
1. Fabricated ± 0.75
2. Sand-Cast ± 0.35
3. Forging ± 0.25
4. Die-Cast ± 0.25
5. Moulded ± 0.15
6. Machined ± 0.25mm
7. Angular ± 0.50degree

Fits unless otherwise stated:
1. Free Running = H9/d9
2. Running = H8/f8
3. Clearance = H7/h6
4. Sliding = H7/g6
5. Interference = H7/u6

Surface finishes unless otherwise stated:
1. Sand-Cast = 16.0µm
2. Drilling = 6.3µm
3. Forging = 6.3µm
4. Milling = 3.2µm
5. Turning = 3.2µm
6. Boring = 3.2µm
7. Die-Cast = 1.6µm
8. Reaming = 1.6µm
9. Grinding = 0.8µm
10. Honing = 0.4µm
11. Polishing = 0.2µm

THIRD ANGLE PROJECTION

Dimensions in millimetres

Drawing to BS8888:2004

Screw threads to BS 8498:2008

Zip Industries Pty Ltd
67 Allingham Street
Condell Park
Sydney
NSW 2200
Australia
Web : www.zipindustries.com
Email : sales@zipindustries.com

Features marked with this symbol: must be referred to in the manufacturing control plan XXX.XX

REVISIONS

Rev	XXXX YYYY	Last Change(s)	ECO	Date	Init
A		First release.	0000	5/11/2012	EVG

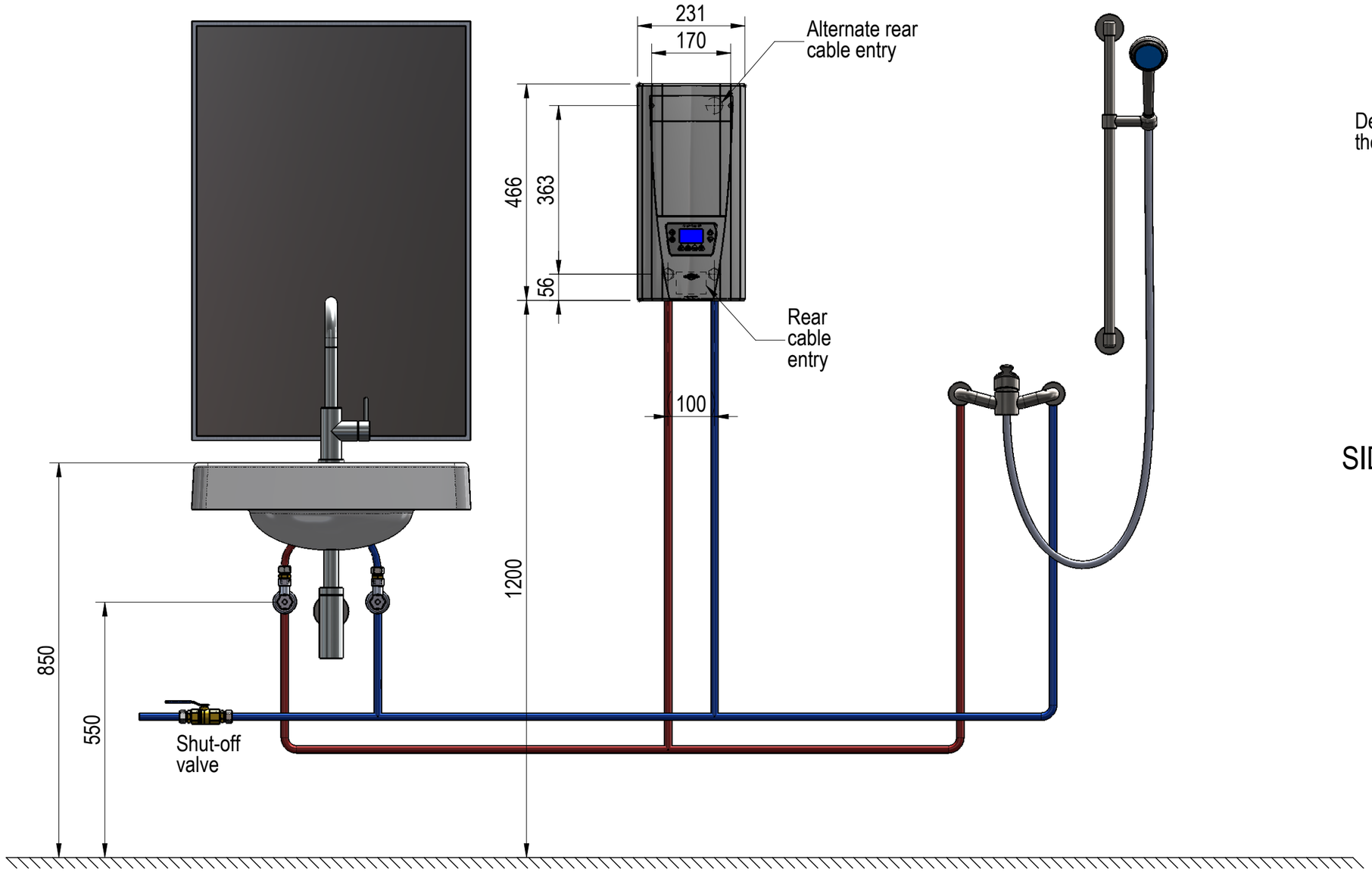

FRONT ELEVATION VIEW

SCALE 1 : 10

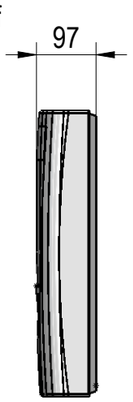

SIDE ELEVATION VIEW

SCALE 1 : 10

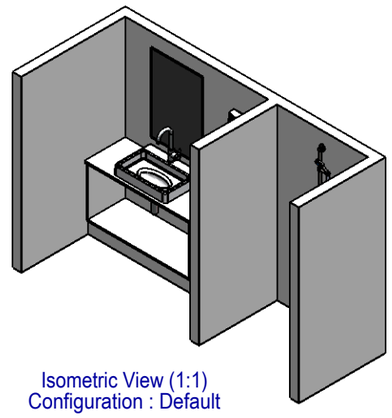

Isometric View (1:1)
Configuration : Default

This drawing is CONFIDENTIAL and is supplied on the express condition that it shall not be LOANED, COPIED or DISCLOSED to any other third party or used for any purpose without the written consent of Zip Industries Pty Ltd. If this document is printed in hardcopy form, it is for INFORMATION ONLY and therefore not subject to updating controls.
For the current revision ALWAYS refer to the NATIVE electronic form as stated in the top left-hand corner of this sheet.
© copyright Zip Industries Pty Ltd, 5/11/2012

Zip Industries

Manufacturing Instructions

Make or Buy : Make

Manufacturing Route : See Components

Raw material : See Components

Remove all sharp edges. This drawing ONLY details information which cannot be ascertained from the 3D geometry of the part(s) attached. Model & dimensions are AFTER all finishing operations

Comments :

Potable? : No | Recyclable? : No | Handed? : No

Approved by : Unapproved on 1/01/2001

Checked by : Unchecked on 1/01/2001

Updated by : edgarg on 13/03/2013 9:03:55 AM

Material : See Components

Finish : Finish

Volume (cm3) : 1257370.9 | Area (cm2) : 342129.9

Mass (g) : 1282357.3 | Density (g/cm3) : 1.0

Description : Assy-Instantaneous Hot Water DSX 18-27kW, 26-39Amps 3PH Pre-set to 50ºC

Project : Washroom Products - Instantaneous Hot Water

Configuration : Default

Model : WL005_27940!

Created by & on : EdgarG on 21/08/2012

Drawing : WL005_27940

Created by & on : EdgarG on 5/11/2012

Rev : A

Derived from : New

Colour : Colour

Scale : 1:1

Sheet : 1 of 1

Status : Production

Size : A3

Discussion

_Drawing Property

Part Property