File Ref : R:\Released\KL003_39076 (Sheet1)

Sheet1 (Default)

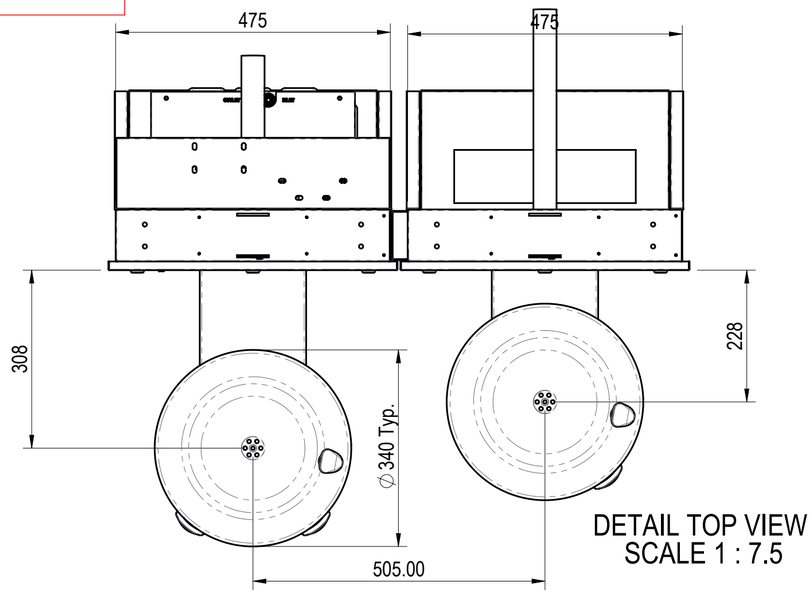

DETAIL TOP VIEW
SCALE 1 : 7.5

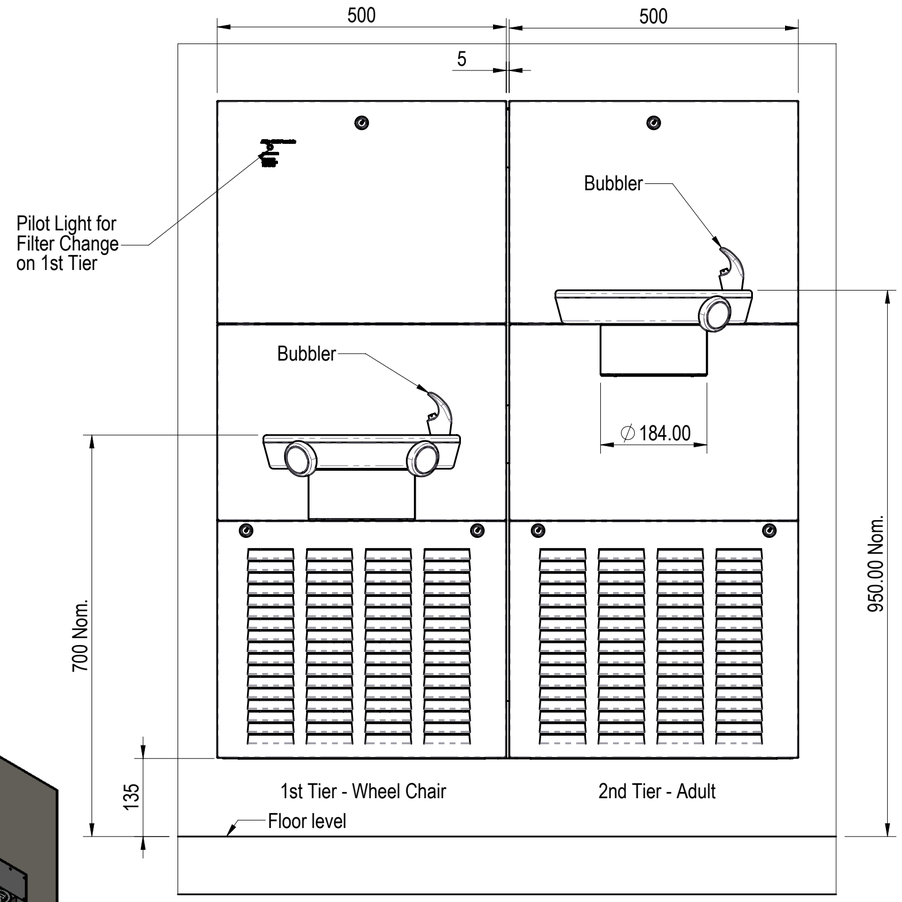

DETAIL FRONT VIEW
SCALE 1 : 7.5

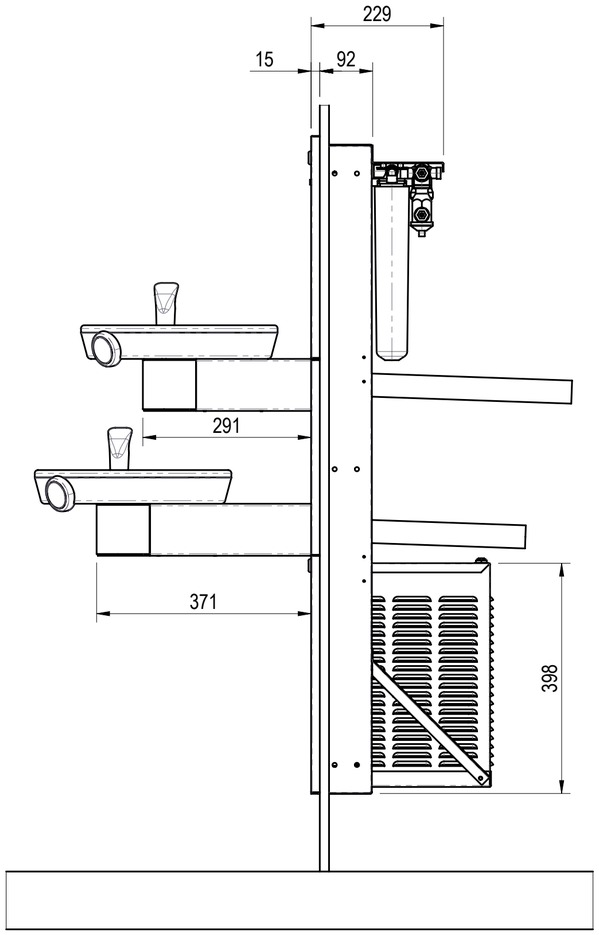

DETAIL SIDE VIEW
SCALE 1 : 7.5

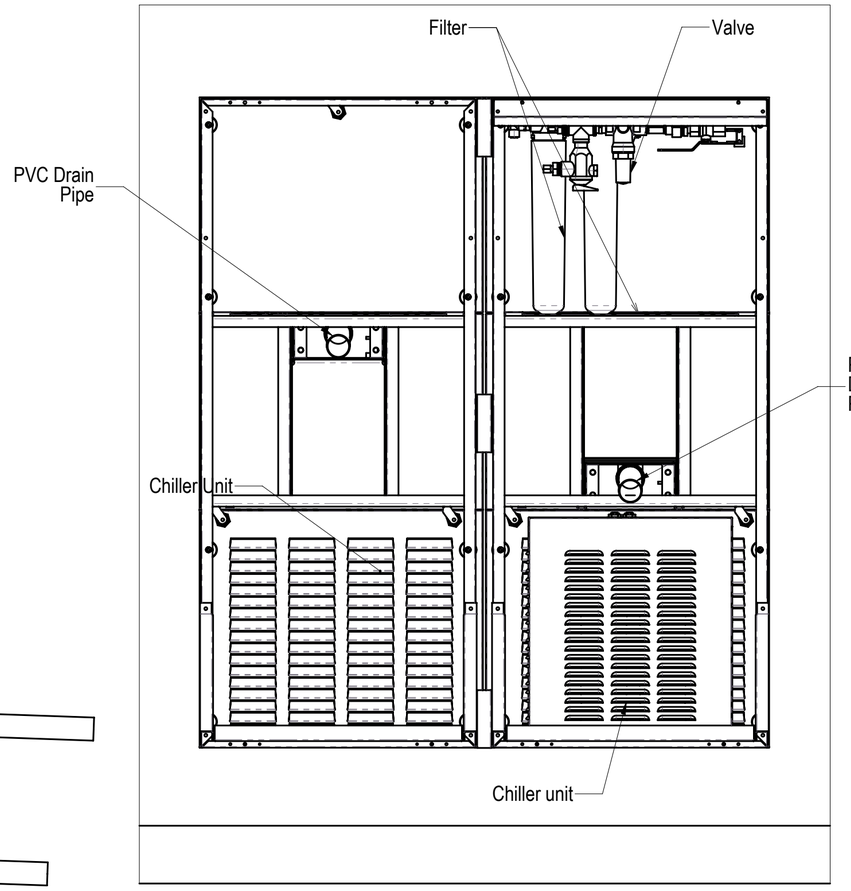

DETAIL REAR VIEW
SCALE 1 : 7.5

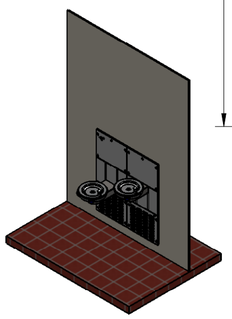

Isometric View (1:1)
Configuration : Default

Limits unless otherwise stated:
1. Fabricated : 0.75
2. Sand-Cast : 0.35
3. Forging : 0.25
4. Die-Cast : 0.25
5. Moulded : 0.15
6. Machined : 0.25mm
7. Angular : 0.50degree

Fits unless otherwise stated:
1. Free Running = H9/d9
2. Running = H8/f8
3. Clearance = H7/h6
4. Sliding = H7/g6
5. Interference = H7/u6

Surface finishes unless otherwise stated:
1. Sand-Cast = 16.0µm
2. Drilling = 6.3µm
3. Forging = 6.3µm
4. Milling = 3.2µm
5. Turning = 3.2µm
6. Boring = 3.2µm
7. Die-Cast = 1.6µm
8. Reaming = 1.6µm
9. Grinding = 0.8µm
10. Honing = 0.4µm
11. Polishing = 0.2µm

THIRD ANGLE PROJECTION

Dimensions in millimetres
Drawing to BS8888:2004
Screw threads to BS 8498:2008

Zip Industries Pty Ltd
67 Allingham Street
Condell Park
Sydney
NSW 2200
Australia
Web : www.zipindustries.com
Email : sales@zipindustries.com

Features marked with this symbol:
must be referred to in the manufacturing control plan

XXX.XX

REVISIONS

Rev	XXXX YYYY	Last Change(s)	ECO	Date	Int

This drawing is CONFIDENTIAL and is supplied on the express condition that it shall not be LOANED, COPIED or DISCLOSED to any other third party or used for any purpose without the written consent of Zip Industries Pty Ltd. If this document is printed in hardcopy form, it is for INFORMATION ONLY and therefore not subject to updating controls.
For the current revision ALWAYS refer to the NATIVE electronic form as stated in the top left-hand corner of this sheet.
© copyright Zip Industries Pty Ltd, 21/05/2012

Zip Industries

Manufacturing Instructions	Approved by : Unapproved on 1/01/2001	Description : 140 Glass/Hr Filt CFB140FWA Chillfountain Double Tier	
Make or Buy : Make	Checked by : Unchecked on 1/01/2001		
Manufacturing Route : See Components	Updated by : edgarg on 7/06/2012 1:27:43 PM		
Raw material : See Components	Material : See Components	Project : Project	Configuration : Default
Remove all sharp edges. This drawing ONLY details information which cannot be ascertained from the 3D geometry of the part(s) attached. Model & dimensions are AFTER all finishing operations	Finish : Finish	Model : KL003_39076	Created by & on : mennen on 7/06/2012
Comments :		Drawing : KL003_39076	Created by & on : EdgarG on 21/05/2012 — Rev : A
	Volume (cm3) : 373612.6 — Area (cm2) : 235364.5	Derived from : New	Colour : Colour
Potable? : No — Recyclable? : No — Handed? : No	Mass (g) : 410192.1 — Density (g/cm3) : 1.1	Scale : 1:20 — Sheet : 1 of 1	Status : Production — Size : A2
			_Drawing Property — Part Property