THIRD ANGLE PROJECTION
Dimensions in millimetres
Drawing to BS8888:2004
Screw threads to BS 9658:2008
Zip Industries Pty Ltd
67 Allingham Street
Condell Park
Sydney
NSW 2200
Australia
Web : www.zipindustries.com
E-mail : sales@zipindustries.com

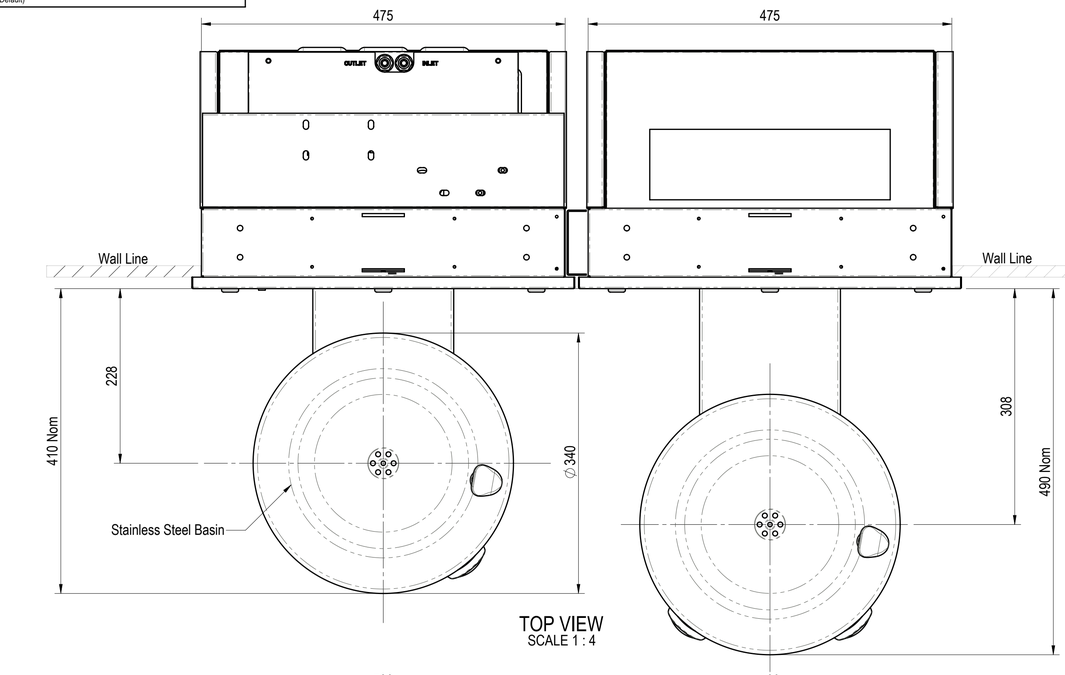

TOP VIEW
SCALE 1 : 4

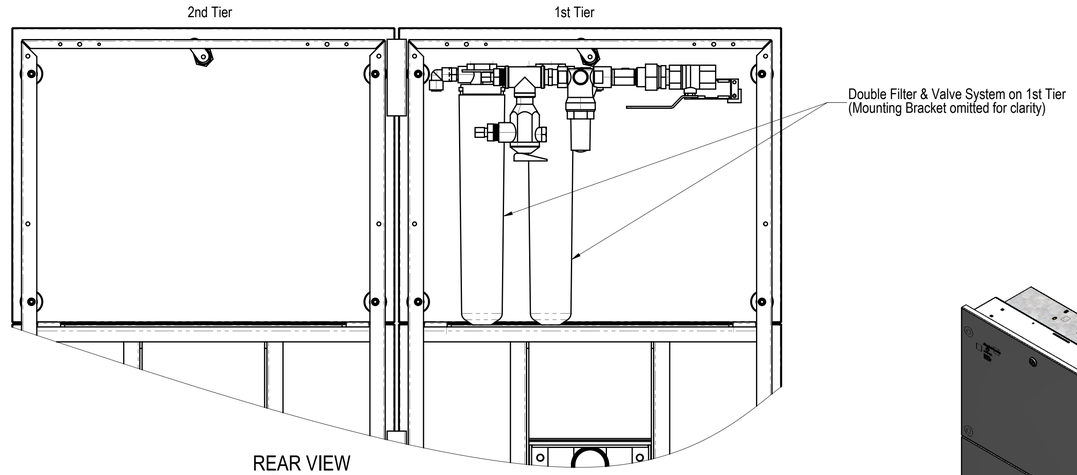

REAR VIEW
SCALE 1 : 4

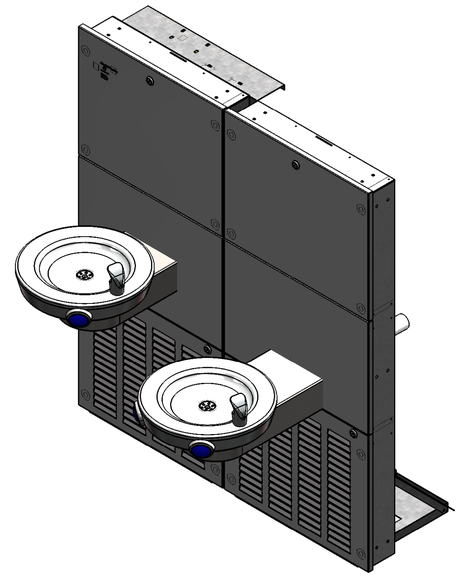

Configuration : Default

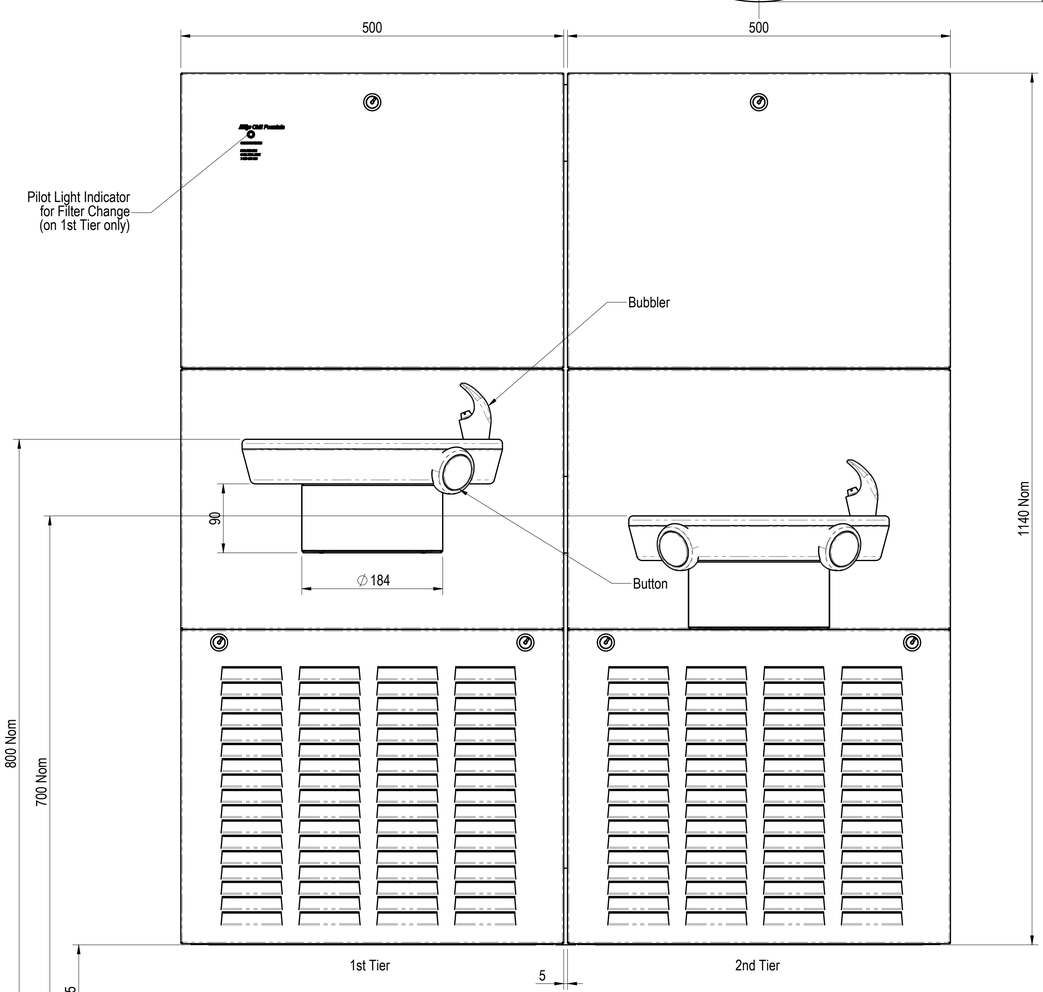

FRONT VIEW
SCALE 1 : 4

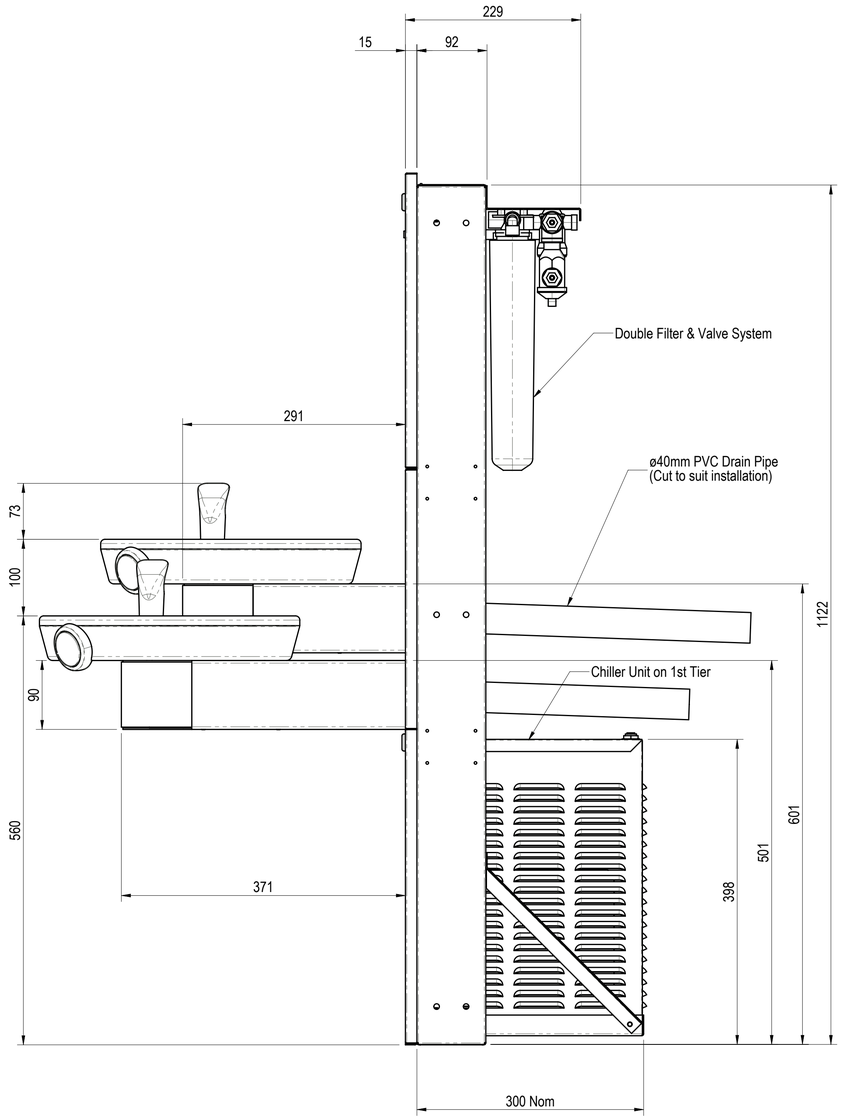

SIDE VIEW
SCALE 1 : 4

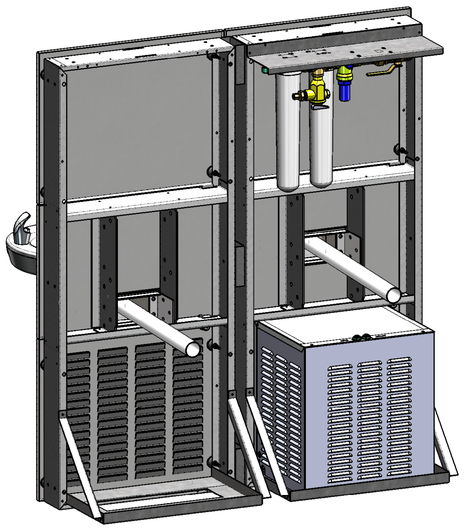

SCALE 1 : 7.5

This drawing is CONFIDENTIAL and is supplied on the express condition that it shall not be LOANED, COPIED or DISCLOSED to any other third party or used for any purpose without the written consent of Zip Industries Pty Ltd. If this document is printed in hardcopy form, it is for INFORMATION ONLY and therefore not subject to updating controls.
For the current revision ALWAYS refer to the NATIVE electronic form as stated in the top left-hand corner of this sheet.
© copyright Zip Industries Pty Ltd, 8/09/2011

Manufacturing Instructions	Approved by : Unapproved on 1/01/2001	Description :	Zip Industries — Chill Fountain - Child/WheelChair Double Bowl
Make or Buy : Make	Checked by : Unchecked on 1/01/2001		
Manufacturing Route : See Components	Updated by : edgarg on 14/04/2014 4:04:36 PM		
Raw material : See Components	Material : See Components	Project : Chill Fountain®	Configuration : Default
Remove all sharp edges. This drawing ONLY details information which cannot be ascertained from the 3D geometry of the part(s) attached. Model & dimensions are AFTER all finishing operations	Finish : Proprietary	Model : 38096	Created by & on : edgarg on 20/11/2007
Comments : Converted by edgarg @ 08/09/2011 15:30:54		Drawing : 38096	Created by & on : Engineer on 8/09/2011 — Rev 00
	Volume (cm3) : 5806.6 — Area (cm2) : 82067.8	Derived from : New	Colour : Proprietary — Size A1
Potable? : No — Recyclable? : No — Handed? : No	Mass (g) : 42386.1 — Density (g/cm3) : 7.3	Scale : 1:1 — Sheet : 1 of 1	Status : Production
			Drawing Property — Config Property — Custom Property

1/01/2001