File Ref : R:\Released\38006

Sheet1 (Default)

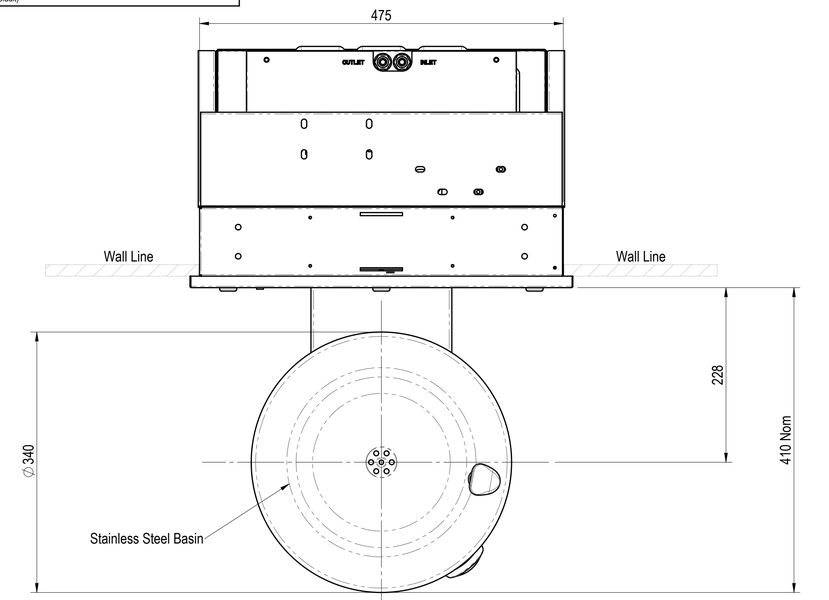


TOP VIEW
SCALE 1 : 4

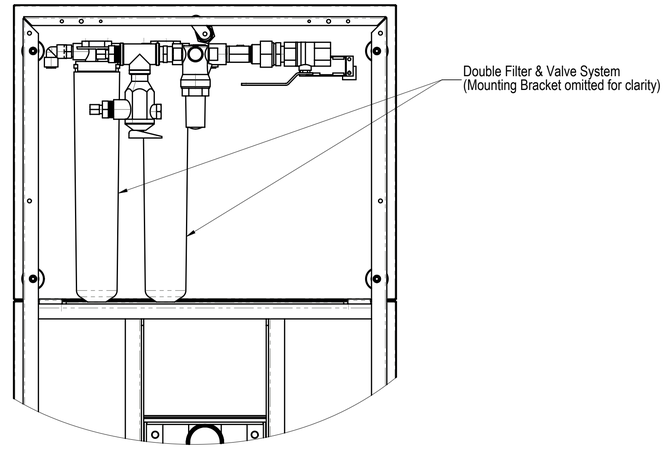


REAR VIEW
SCALE 1 : 4

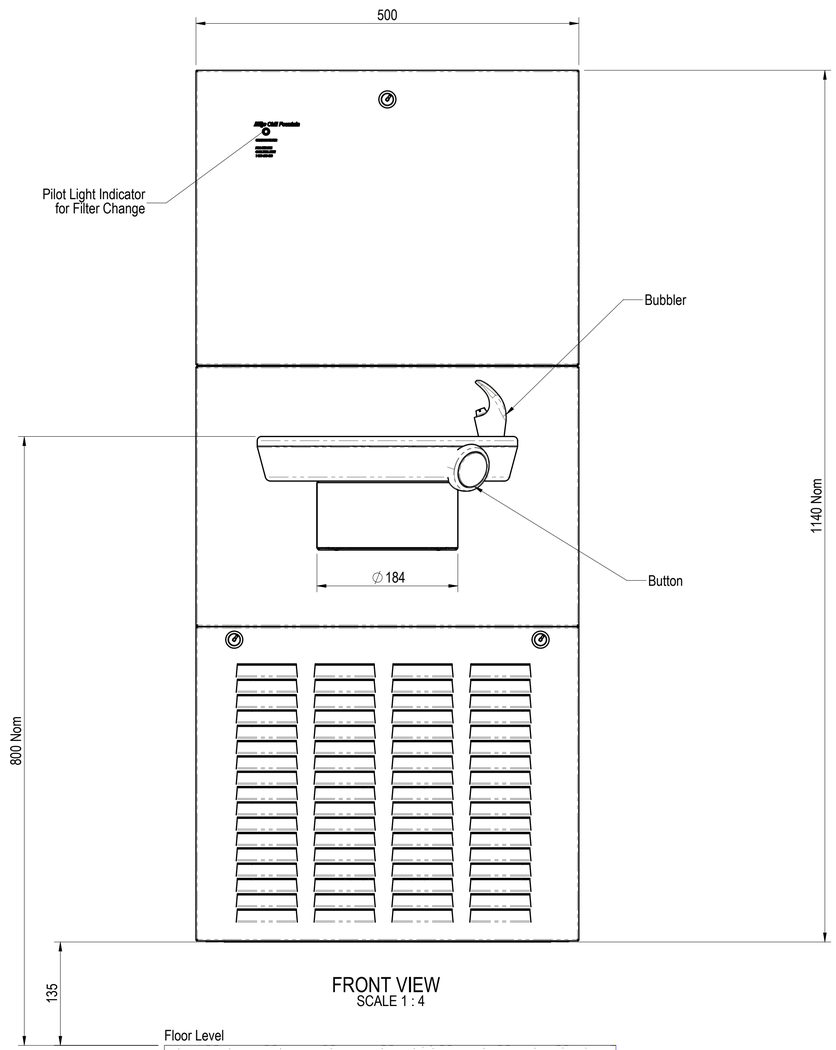


FRONT VIEW
SCALE 1 : 4

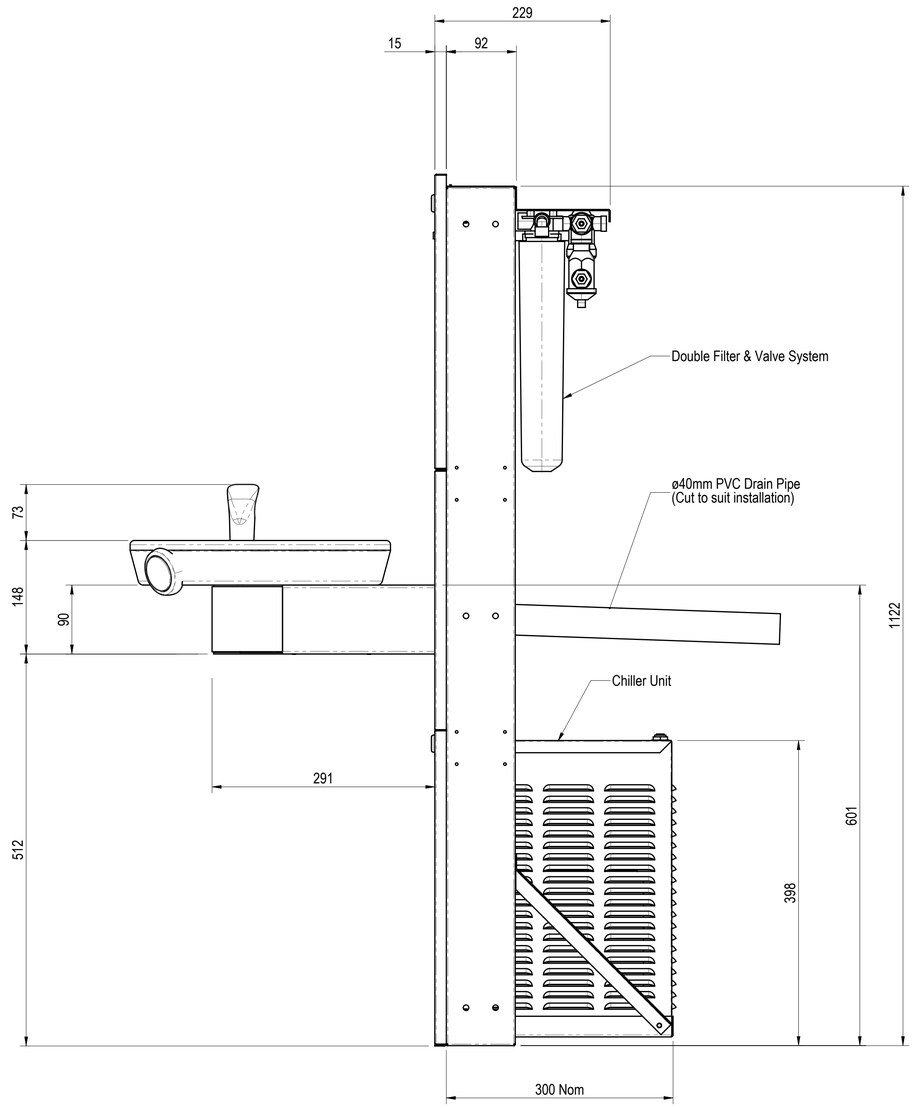


SIDE VIEW
SCALE 1 : 4

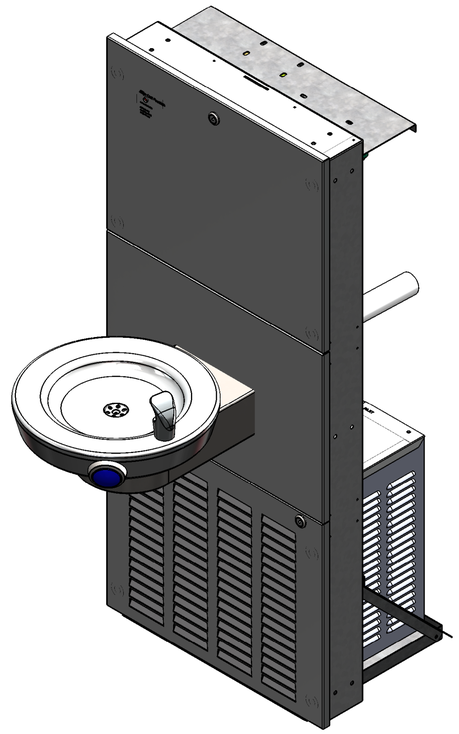

Configuration : Default

THIRD ANGLE PROJECTION

Dimensions in millimetres
Drawing to BS8888:2004
Screw threads to BS 9456:2006


Zip Industries Pty Ltd
67 Allingham Street
Condell Park
Sydney
NSW 2200
Australia
Web : www.zipindustries.com
E-mail : sales@zipindustries.com



This drawing is CONFIDENTIAL and is supplied on the express condition that it shall not be LOANED, COPIED or DISCLOSED to any other third party or used for any purpose without the written consent of Zip Industries Pty Ltd. If this document is printed in hardcopy form, it is for INFORMATION ONLY and therefore not subject to updating controls.
For the current revision ALWAYS refer to the NATIVE electronic form as stated in the top left-hand corner of this sheet.
© copyright Zip Industries Pty Ltd. 8/09/2011.


Zip Industries

| | | | |
|---|---|---|---|
| Manufacturing Instructions | Approved by : Unapproved on 1/01/2001 | Description : Chill Fountain - Child Single Tier | |
| Make or Buy : Make | Checked by : Unchecked on 1/01/2001 | | |
| Manufacturing Route : See Components | Updated by : edgarg on 14/04/2014 3:07:16 PM | | |
| Raw material : See Components | Material : See Components | Project : Chill Fountain® | Configuration : Default |
| Remove all sharp edges. This drawing ONLY details information which cannot be ascertained from the 3D geometry of the part(s) attached. Model & dimensions are AFTER all finishing operations | Finish : Proprietary | Model : 38006 | Created by & on : edgarg on 20/11/2007 |
| Comments : Converted by edgarg @ 08/09/2011 15:30:54 | | Drawing : 38006 | Created by & on : Engineer on 8/09/2011 — Rev : 00 |
| | Volume (cm3) : 2875.5 — Area (cm2) : 40935.7 | Derived from : New | Colour : Proprietary — Size : A1 |
| Potable? : No — Recyclable? : No — Handed? : No | Mass (g) : 20961.0 — Density (g/cm3) : 7.3 | Scale : 1:1 — Sheet : 1 of 1 | Status : Production |
| | | | Drawing Property — Config Property — Custom Property |

1/01/2001