DATA SHEET

Polis 2/MC26-4 Quad Deck Bakery Oven
2 + 2 + 2 + 2 Tray (400x600) Capacity

POM2E06A-4



Build

- The Polis 2/MC26-3 features a triple-deck design with a 260 mm chamber height—the highest in the series—offering ample space for tall bakery items.
- This versatile modular multi-function design ensures high-performance baking for pizzas, breads, and pastries, supported by 70 years of experience in technology, people, and research.
- Accommodates 2 + 2 + 2 + 2 x 600 x 400 mm baking trays in each chamber, designed for side-by-side tray insertion.
- Heavy-duty full stainless steel construction combined with a sleek, modern design.
- Robust construction with a fully sealed, vented, and washable baking chamber featuring removable rails.
- Heavy-gauge front door requires no maintenance and is gasket-free, spring-free, and double-insulated with best-in-class insulation, ensuring minimal thermal heat loss.
- Reinforced, double-insulated stainless steel door with double glass-ceramic fireproof windows.
- Armored stainless steel heating elements minimize heat loss from frequent door openings and high-volume usage.
- High-powered elements mounted at the door opening compensate for heat loss, ensuring consistent baking temperatures and minimal heat loss during high-volume use.
- Standard thick refractory stone cooking base enhances heat retention and absorption for superior cooking performance and even heat distribution
- The advanced control panel features 20 programmable cooking options with customizable settings, including temperature (0–400°C), timer, element power (0–9), and steam injection.
- Programs can be saved and named for easy access.
- Schedule up to two programmed starts per day with your customized baking settings, each spaced an hour apart.
- Intuitive color display and audible buzzer signal the user when cooking is finished.
- Pre-heating functionality with configurable slow and fast modes ensures the oven is automatically ready for use.
- The Economy mode is easily activated with a button on the control panel, reducing energy consumption while maintaining oven temperature and saving on energy costs.
- Auto-cleaning function with a 45-minute program automatically sanitizes the cooking chamber for consistent hygiene.
- Balanced dual top and bottom detection probes ensure accurate temperature regulation across the entire baking chamber, providing even baking conditions.
- Independent top and bottom heating adjustments (0–9 intensity) allow precise control of heat distribution without changing chamber temperature, ensuring optimal baking and consistent, high-quality results.
- Manual exhaust valve for humidity management
- LED lamp chamber lighting for low energy consumption and long life.
- Optional steel embossed base improves air circulation beneath the pan for optimized tray cooking.
- Optional steam generators can be added to the deck oven for high-quality steam. Once installed, steam is activated via the control panel, programmed into baking cycles, or manually injected as needed.
- Optional accessories include leavening cells, adjustable stands, bread loaders, tray racks, and built-in extractor hoods, all compliant with Australian and NZ standards.
- The Teorema Polis is built with the highest-quality materials and components, making it a reliable and durable choice and a testiment to its useage around the world.

OPTIONS

- Stand on castors
- Exhaust Canopy
- Steam Generator
- Bread Loaders

Controls

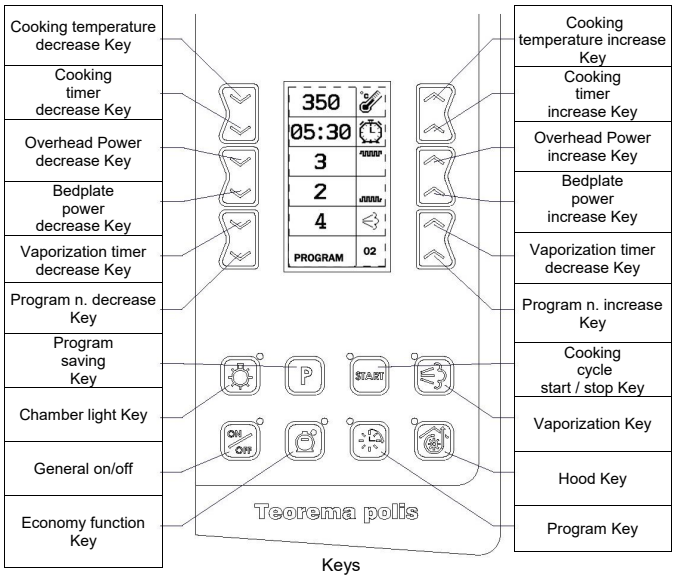

Keys

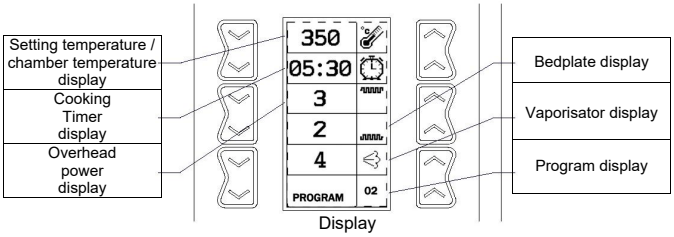

Display

DATA SHEET

Polis 2/MC26-4 Quad Deck Bakery Oven
2 + 2 + 2 + 2 Tray (400x600) Capacity

POM2E06A-4

Technical specifications

External Size

External Width	1250mm
External Depth	1010mm
External Height	1760mm

Cooking Chamber size

Internal Width	830mm
Internal Depth	660mm
Internal Height	260mm

Baking Pans

Number of Pans	2 + 2 + 2 + 2
Pan Width	600mm
Pan Depth	400mm

Weight

Net weight	155 kg x 4
package weight	*

Connection requirements electric triphase + neutral or triphase

Electrical connected loads	6 kW x 4
Voltage	415V or 240V upon request
Plug Supplied	No
Cable Length	2m
Current at 400V - 3N	10.5
Current at 230V - 3	18
Level of protection	IP23
Electrical connection	Plugless 4 or 5 conductors

Exhaust

Air exchange	65 m3/h

Minimum clearances during installation

Minimum clearance	Left	Back	Right
Standard	200mm	0mm	200mm

Environment

Temperature	0 - 40 °c
Maximum humidity	95% without condensation
Noise	< 70 decibels

Operation

Maximum Temperature	400°c

Warranty

2 years warranty Parts & Labour

**Subject to a prevanttitive maintence plan*

We reserve the right to alter specifications without notice.

DATA SHEET

Polis 2/MC26-4 Quad Deck Bakery Oven
2 + 2 + 2 + 2 Tray (400x600) Capacity

POM2E06A-4

Technical drawings

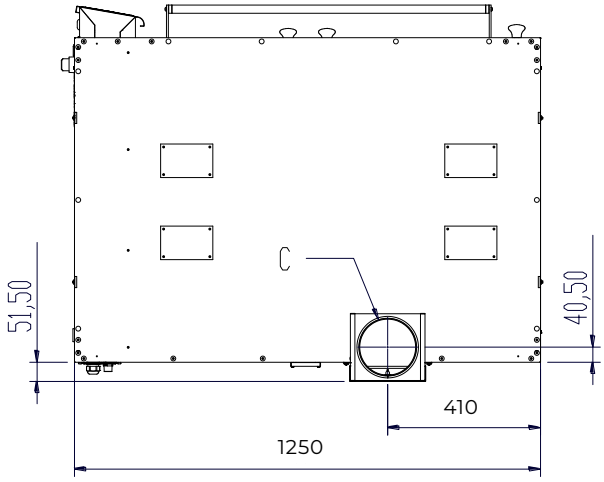

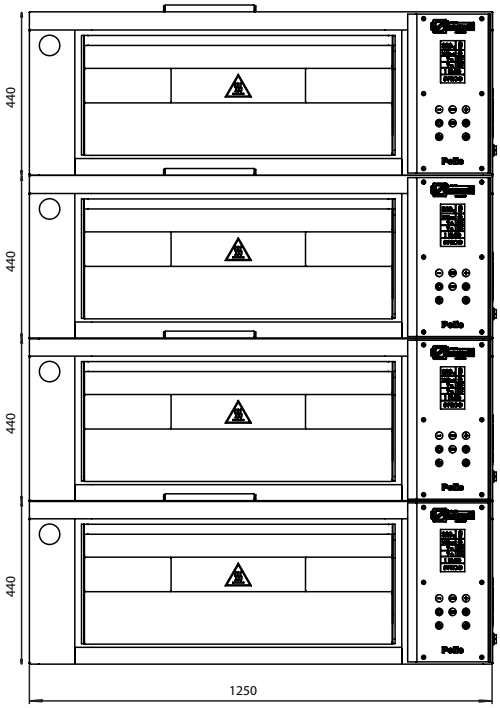

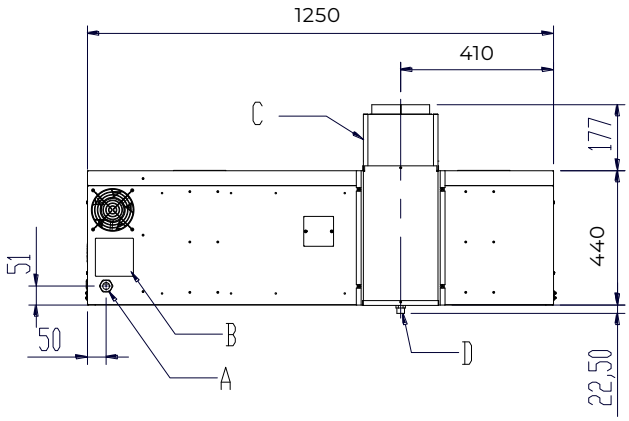

Rear and side view are shown
as a single deck view only for illustrative purposes per deck only.

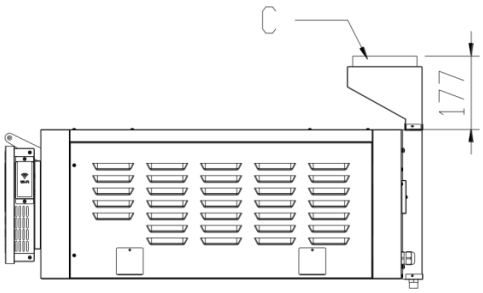

Optional with hood

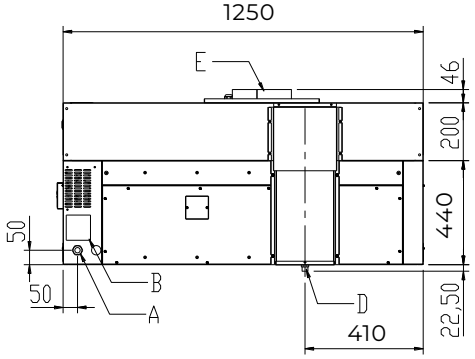

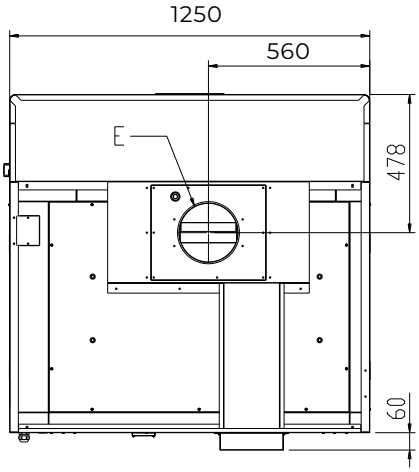

A	ELECTRICAL POWER INPUT
B	INFORMATION PLATE
C	VAPOUR EXHAUST CONNECTION Ø 150mm
D	CONDENSATION EXHAUST
E	VAPOUR EXHAUST Ø 200mm

We reserve the right to alter specifications without notice.