DATA SHEET

Baratta PEIME-80 Electric 80 litre Mixing Jacketed Kettle with Auto Mixing | Auto tilt

453116050

Build

- Heavy-duty robust construction made entirely from AISI 304 stainless steel, designed for intensive use and guaranteed longevity.
- 80 litre Jacketed tank constructed from heavy-gauge, marine-grade AISI 316 stainless steel, making it suitable for acidic products.
- Thick-rayed bottom base design enhances thermal efficiency and stability, ensuring optimal heat distribution and durability during intensive use.
- AISI 304 heavy-gauge stainless steel lid equipped with a special device for balanced weight, ensuring easy opening.
- Electric tilting mechanism powered by a robust gear motor, enabling effortless emptying of the tank while minimizing manual effort.
- Heavy-duty marine-grade AISI 316 stainless steel mixing arms with food-grade Teflon scrapers, adjustable speeds, and reverse capabilities. These arms ensure thorough mixing, prevent food adhesion, and operate autonomously without user intervention.
- Quality materials and construction meet the highest hygiene standards, facilitating easy washing and sanitization.
- Best-in-class insulation layers limit heat loss, optimizing energy consumption and cooking yield.
- Indirect electric heating system powered by 14.8 kW armored heating elements heats the water in the jacketed wall cavity, generating steam for even heat distribution while minimizing food sticking, ensuring perfect cooking results.
- Water jacket equipped with a safety valve and manometer for monitoring pressure levels, with a pressure gauge set to 0.45 bar, ensuring optimal operation and safety.
- Automatic water loading system prevents the tank from running dry, safeguarding against potential damage. Electronic bottom temperature control with a safety level, providing precise regulation and added protection during operation.
- Core probe for precise control of product temperature during cooking, ensuring optimal results and consistent quality.
- Electronic thermostat regulates temperatures from 30°C to 105°C, ensuring precise control for optimal cooking of products.
- IP54 water protection rating safeguards the kettle against dust and water splashes, making it suitable for various kitchen environments.
- Includes a safety lamp to alert users to any electrical phase issues for enhanced safety.
- Durable electromechanical control panel allows precise programming of cooking functions and mixer arm rotations for flexible operation. Positioned above the unit, it ensures easy cleaning and safe sanitization, enhancing hygiene and usability.
- Once programmed, the kettle autonomously executes the cooking cycle, signaling completion with an acoustic alert.
- Quick drain valve installation available upon request; DIN50 connection allows for easy integration with containers, packaging machines, or transfer pumps.
- Backed by over 40 years of industry experience, Baratta continually innovates to exceed standards for strength, functionality, and maintenance, affirming its leadership in high-quality kitchen solutions.

Technical specifications

External Size

External Width	1320mm
External Depth	1015mm
External Height	900mm

Weight

Net weight	
package weight	

Technical Features

Capacity	80Lt
Tilt Type	Automatic
Lid lifting type	Manual
Temperature	30°-105°

Connection requirements electric

Electrical connected loads	14.8W
Voltage	400V
Plug Supplied	No

Warranty

2 Year Warranty	2 years parts and labour

**Subject to a prevanttitive maintence plan*

DATA SHEET

Baratta PEIME-80 Electric 80 litre Mixing Jacketed Kettle with Auto Mixing | Auto tilt

453116050

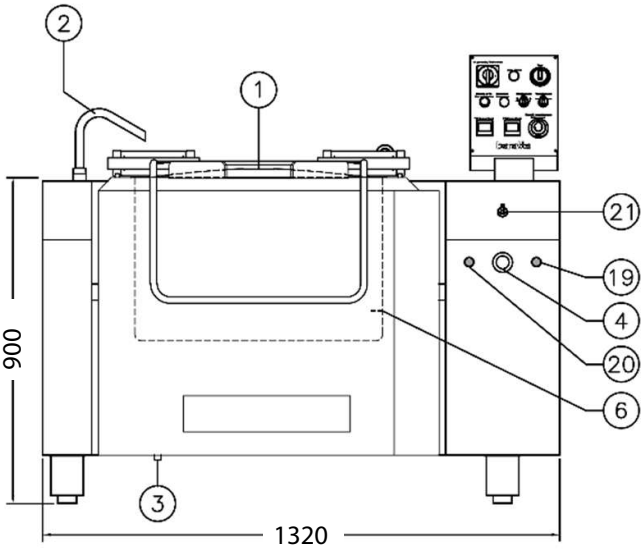

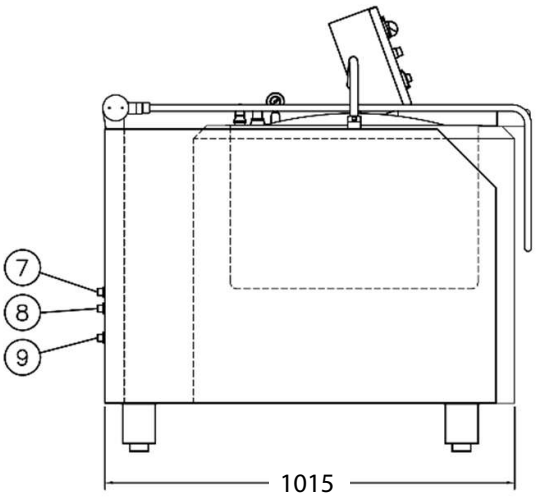

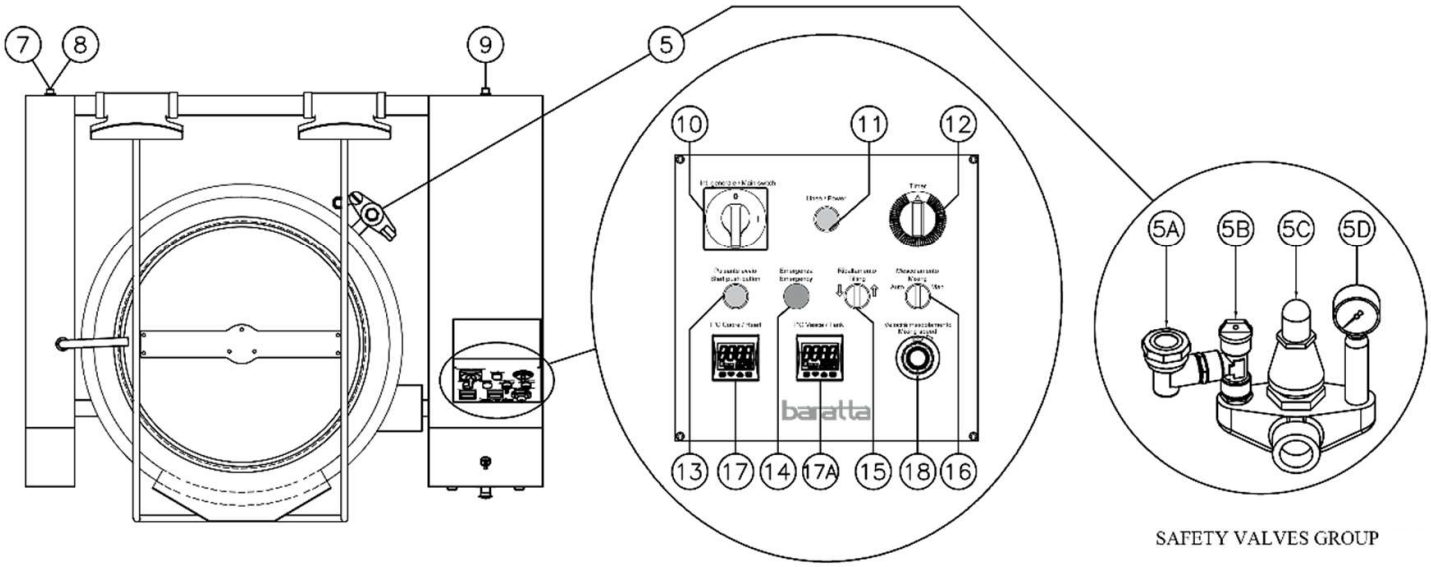

CONTROL PANEL

SAFETY VALVES GROUP

1	Lid
2	Tank water filler spout
3	Water jacket drain
4	Emergency stop
5	Safety valve group
5a	Automatic water jacket/Air discharge vavle
5b	Water jacket water manual load
5c	Safety valve
5d	Manometer
6	Heart probe
7	Cold water connection
8	Hot water connection
9	Cord connector

10	Main switch
11	Power on pilot lamp
12	Timer
13	Push button start
14	Electric alarm pilot lamp
15	Tilting selector
16	Mixing selector
17	Heart probe thermostat
17a	Safety thermostat
18	Speed mixing regulator
19	Phase control lamp
20	Warning lamp water jacket low water level
21	Tank water load selector

We reserve the right to alter specifications without notice.