# DATA SHEET

## Baratta PEIME-220 Electric 220 litre Mixing Jacketed Kettle with Auto Mixing | Auto tilt

453116110

## Build

- Heavy-duty robust construction made entirely from AISI 304 stainless steel, designed for intensive use and guaranteed longevity.
- 220 litre Jacketed tank constructed from heavy-gauge, marine-grade AISI 316 stainless steel, making it suitable for acidic products.
- Thick-rayed bottom base design enhances thermal efficiency and stability, ensuring optimal heat distribution and durability during intensive use.
- AISI 304 heavy-gauge stainless steel lid equipped with a special device for balanced weight, ensuring easy opening.
- Electric tilting mechanism powered by a robust gear motor, enabling effortless emptying of the tank while minimizing manual effort.
- Heavy-duty marine-grade AISI 316 stainless steel mixing arms with food-grade Teflon scrapers, adjustable speeds, and reverse capabilities. These arms ensure thorough mixing, prevent food adhesion, and operate autonomously without user intervention.
- Quality materials and construction meet the highest hygiene standards, facilitating easy washing and sanitization.
- Best-in-class insulation layers limit heat loss, optimizing energy consumption and cooking yield.
- Indirect electric heating system powered by 33.2kW armored heating elements heats the water in the jacketed wall cavity, generating steam for even heat distribution while minimizing food sticking, ensuring perfect cooking results.
- Water jacket equipped with a safety valve and manometer for monitoring pressure levels, with a pressure gauge set to 0.45 bar, ensuring optimal operation and safety.
- Automatic water loading system prevents the tank from running dry, safeguarding against potential damage. Electronic bottom temperature control with a safety level, providing precise regulation and added protection during operation.
- Core probe for precise control of product temperature during cooking, ensuring optimal results and consistent quality.
- Electronic thermostat regulates temperatures from 30°C to 105°C, ensuring precise control for optimal cooking of products.
- IP54 water protection rating safeguards the kettle against dust and water splashes, making it suitable for various kitchen environments.
- Includes a safety lamp to alert users to any electrical phase issues for enhanced safety.
- Durable electromechanical control panel allows precise programming of cooking functions and mixer arm rotations for flexible operation. Positioned above the unit, it ensures easy cleaning and safe sanitization, enhancing hygiene and usability.
- Once programmed, the kettle autonomously executes the cooking cycle, signaling completion with an acoustic alert.
- Quick drain valve installation available upon request; DIN50 connection allows for easy integration with containers, packaging machines, or transfer pumps.
- Backed by over 40 years of industry experience, Baratta continually innovates to exceed standards for strength, functionality, and maintenance, affirming its leadership in high-quality kitchen solutions.

## Technical specifications

**External Size**

| | |
|---|---|
| External Width | 1560mm |
| External Depth | 1265mm |
| External Height | 1070mm |

**Weight**

| | |
|---|---|
| Net weight | |
| package weight | |

**Technical Features**

| | |
|---|---|
| Capacity | 220Lt |
| Tilt Type | Automatic |
| Lid lifting type | Manual |
| Temperature | 30°-105° |

**Connection requirements electric**

| | |
|---|---|
| Electrical connected loads | 33.2kW |
| Voltage | 415/3+N/50 |
| Plug Supplied | No |

**Warranty**

| | |
|---|---|
| **2 Year Warranty** | 2 years parts and labour |

**Subject to a prevanttitive maintence plan*

# DATA SHEET

## Baratta PEIME-220 Electric 220 litre Mixing Jacketed Kettle with Auto Mixing | Auto tilt

453116110

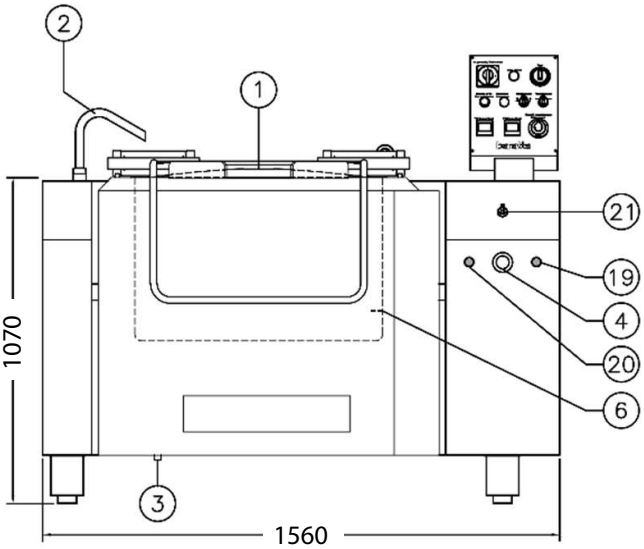


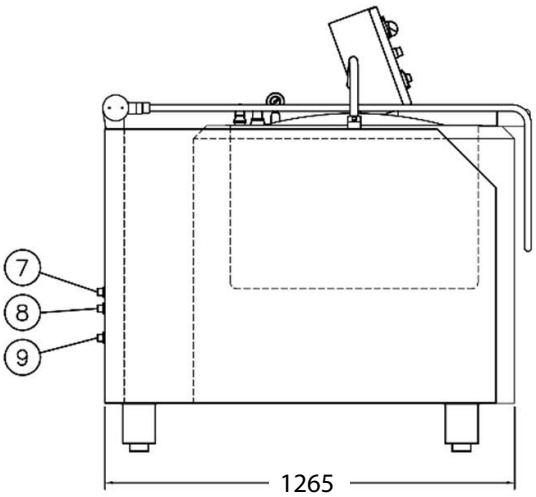


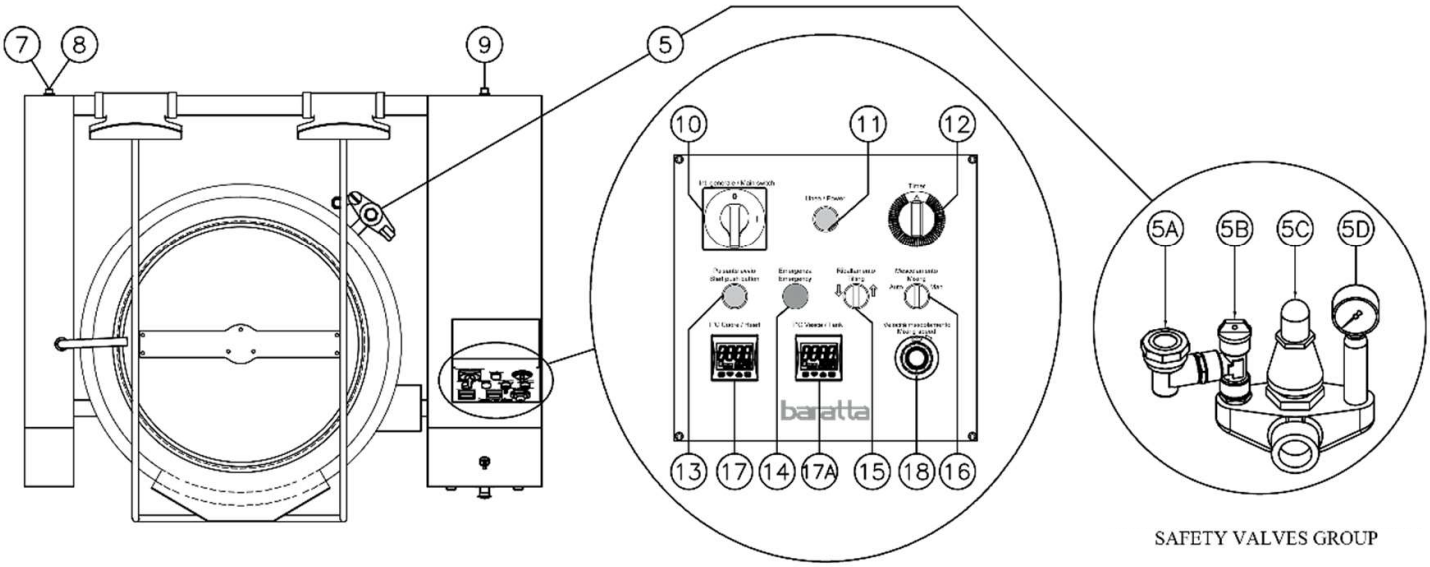


CONTROL PANEL

SAFETY VALVES GROUP

| | |
|---|---|
| 1 | Lid |
| 2 | Tank water filler spout |
| 3 | Water jacket drain |
| 4 | Emergency stop |
| 5 | Safety valve group |
| 5a | Automatic water jacket/Air discharge vavle |
| 5b | Water jacket water manual load |
| 5c | Safety valve |
| 5d | Manometer |
| 6 | Heart probe |
| 7 | Cold water connection |
| 8 | Hot water connection |
| 9 | Cord connector |

| | |
|---|---|
| 10 | Main switch |
| 11 | Power on pilot lamp |
| 12 | Timer |
| 13 | Push button start |
| 14 | Electric alarm pilot lamp |
| 15 | Tilting selector |
| 16 | Mixing selector |
| 17 | Heart probe thermostat |
| 17a | Safety thermostat |
| 18 | Speed mixing regulator |
| 19 | Phase control lamp |
| 20 | Warning lamp water jacket low water level |
| 21 | Tank water load selector |

We reserve the right to alter specifications without notice.