DATA SHEET

Baratta BRT-120IMR Electric 120 litre Bratt Pan with Auto tilt

455102310

Build

- Heavy-duty construction made from high-grade AISI 304 stainless steel for durability and hygiene
- 120-liter tank with a radiused bottom for easy cleaning and sanitization.
- Enhanced insulation layers minimize heat loss and optimize energy consumption.
- Thick, fully rayed AISI 304 cooking base with heavy iron-clad-ded steel for superior heat distribution and retention.
- Motorized tilting mechanism powered by a heavy-duty gear motor for efficient food handling and emptying.
- Heavy-gauge self-balancing lid that can be locked in the open position for convenience.
- Large protruding handle for a comfortable grip during operation and enhanced working ergonomics.
- Adjustable thermostat allowing precise temperature control from 30°C to 300°C for versatile cooking tasks.
- Poweful 18.5 kW stainless steel armored heating elements for consistent and efficient heat distribution.
- Integrated safety thermostat to protect against overheating for safe operation.
- Temperature probe measures the bottom tank temperature for accurate adjustments based on food type.
- Electronic phase control with a safety lamp to alert users to electrical phase issues.
- Optional water mix tap for easy filling of the tank, enhancing operational efficiency.
- Standard castors for easy mobility and relocation within the kitchen.
- IP44 water protection rating, safeguarding against dust and water splashes, suitable for various kitchen environments.
- Designed for easy use and maintenance, reflecting Baratta's commitment to quality solutions.

Technical specifications

External Size

External Width	1385mm
External Depth	955 mm
External Height	900mm

Weight

Net weight	
package weight	

Technical Features

Tank capacity	120Lt
Temperature	30°-300°

Connection requirements electric

Electrical connected loads	18.5kW
Voltage	415/3+N/50
Plug Supplied	No

Warranty

2 Year Warranty	2 years parts and labour

**Subject to a prevanttitive maintence plan*

DATA SHEET

Baratta BRT-120IMR Electric
120 litre Bratt Pan with Auto tilt

455102310

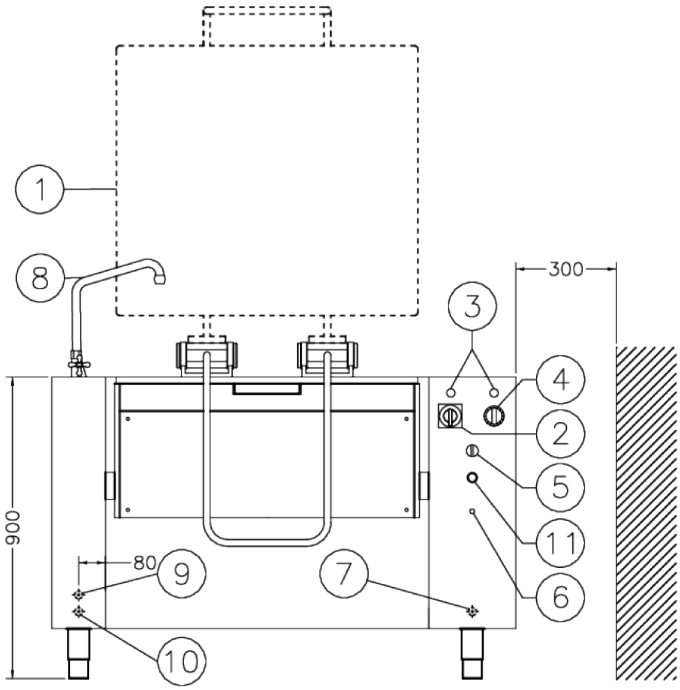

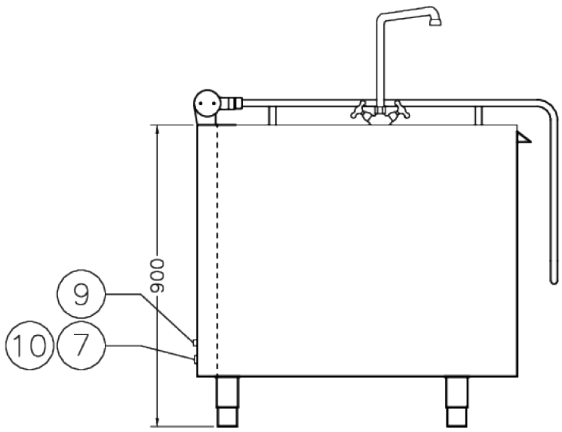

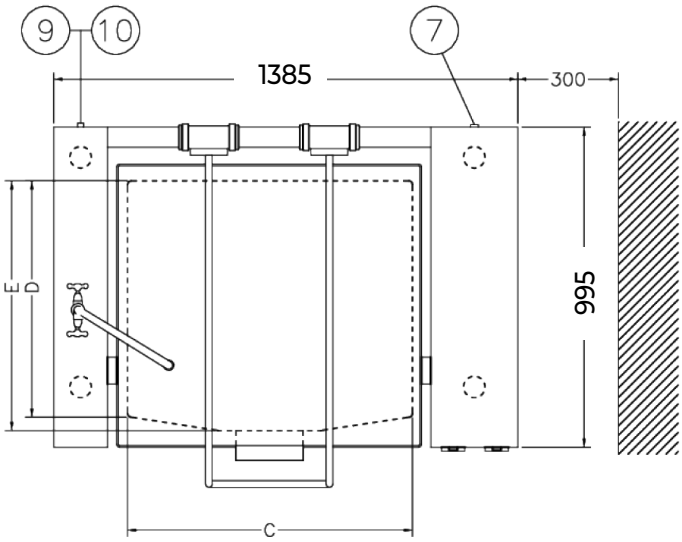

1	Lid
2	Main switch
3	Pilot lamps
4	Thermostat
5	Tilting Selector
6	Safety thermostat

7	Cord connector
8	Water mix tap (optional with extra cost)
9	Cold water connection 1/2 male (optional with extra cost)
10	Hot water connection 1/2 male (optional with extra cost)
11	Phases contol lamp

We reserve the right to alter specifications without notice.