DESPIECE TECNICO
TECHNICAL PARTS

LAVAVAJILLAS DE APERTURA FRONTAL
FRONT LOADING DISHWASHERS

MODELOS / MODELS

GT-OEM-500 / SOFT / W / B / DD / F / SA / UK

50Hz/60Hz

Vers. February 2018
Revised October 2023

MODEL DRAWING RELATION

MODEL	UC_01	UC_03	UC_04	UC_05	UC_06	UC_07	UC_08	UC_09	UC_11
	Structure	Door	Wash Functional Part	Gravity Drain	Drain Pump	Rinsing Functional Part	W Rinsing Functional Part	SOFT Rinsing Functional Part	Electric Functional Part
GT-OEM-500	X	X	X	X		X			X
GT-OEM-500 DD	X	X	X	X		X			X
GT-OEM-500 B	X	X	X		X	X			X
GT-OEM-500 B DD	X	X	X		X	X			X
GT-OEM-500 W DD	X	X	X	X			X		X
GT-OEM-500 W B DD	X	X	X		X		X		X
GT-OEM-500 F SA	X	X	X	X		X			X
GT-OEM-500 DD F SA	X	X	X	X		X			X
GT-OEM-500 B F SA	X	X	X		X	X			X
GT-OEM-500 B DD F SA	X	X	X		X	X			X
GT-OEM-500 W DD F SA	X	X	X	X			X		X
GT-OEM-500 W B DD F SA	X	X	X		X		X		X
GT-OEM-500 UK	X	X	X	X		X			X
GT-OEM-500 DD UK	X	X	X	X		X			X
GT-OEM-500 B UK	X	X	X		X	X			X
GT-OEM-500 B DD UK	X	X	X		X	X			X
GT-OEM-500 W DD UK	X	X	X	X			X		X
GT-OEM-500 W B DD UK	X	X	X		X		X		X
GT-OEM-500 F SA UK	X	X	X	X		X			X
GT-OEM-500 DD F SA UK	X	X	X	X		X			X
GT-OEM-500 B F SA UK	X	X	X		X	X			X
GT-OEM-500 B DD F SA UK	X	X	X		X	X			X
GT-OEM-500 W DD F SA UK	X	X	X	X			X		X
GT-OEM-500 W B DD F SA UK	X	X	X		X		X		X
GT-OEM-500 SOFT	X	X	X	X				X	X
GT-OEM-500 SOFT DD	X	X	X	X				X	X
GT-OEM-500 SOFT B	X	X	X		X			X	X
GT-OEM-500 SOFT B DD	X	X	X		X			X	X
GT-OEM-500 SOFT SA	X	X	X	X				X	X
GT-OEM-500 SOFT DD SA	X	X	X	X				X	X
GT-OEM-500 SOFT B SA	X	X	X		X			X	X
GT-OEM-500 SOFT B DD SA	X	X	X		X			X	X
GT-OEM-500 SOFT	X	X	X	X				X	X
GT-OEM-500 SOFT DD	X	X	X	X				X	X
GT-OEM-500 SOFT B	X	X	X		X			X	X
GT-OEM-500 SOFT B DD	X	X	X		X			X	X
GT-OEM-500 SOFT SA	X	X	X	X				X	X
GT-OEM-500 SOFT DD SA	X	X	X	X				X	X
GT-OEM-500 SOFT B SA	X	X	X		X			X	X
GT-OEM-500 SOFT B DD SA	X	X	X		X			X	X

* Si su modelo no esta en la lista de planos, escoga la descripcion mas cercana

* If your model does appear in the list of drawings, choose the closest description

OPTIONS	DESCRIPCIÓN	DESCRIPTION
W	Bomba de aclarado	Rinsing pump
B	Bomba de desagüe	Drain Pump
DD	Dosificador de detergente	Detergent dispenser
F	Filtros de acero inoxidable	Stainless steel filters
SA	Ramas de lavado en acero inoxidable	Rinsing arms in Stainless Steel
UK	Potencia de cuba y cable modificado para R.U	Modified Tank power and power cord for UK
SOFT	DESCALCIFICADOR	WATER SOFTENER

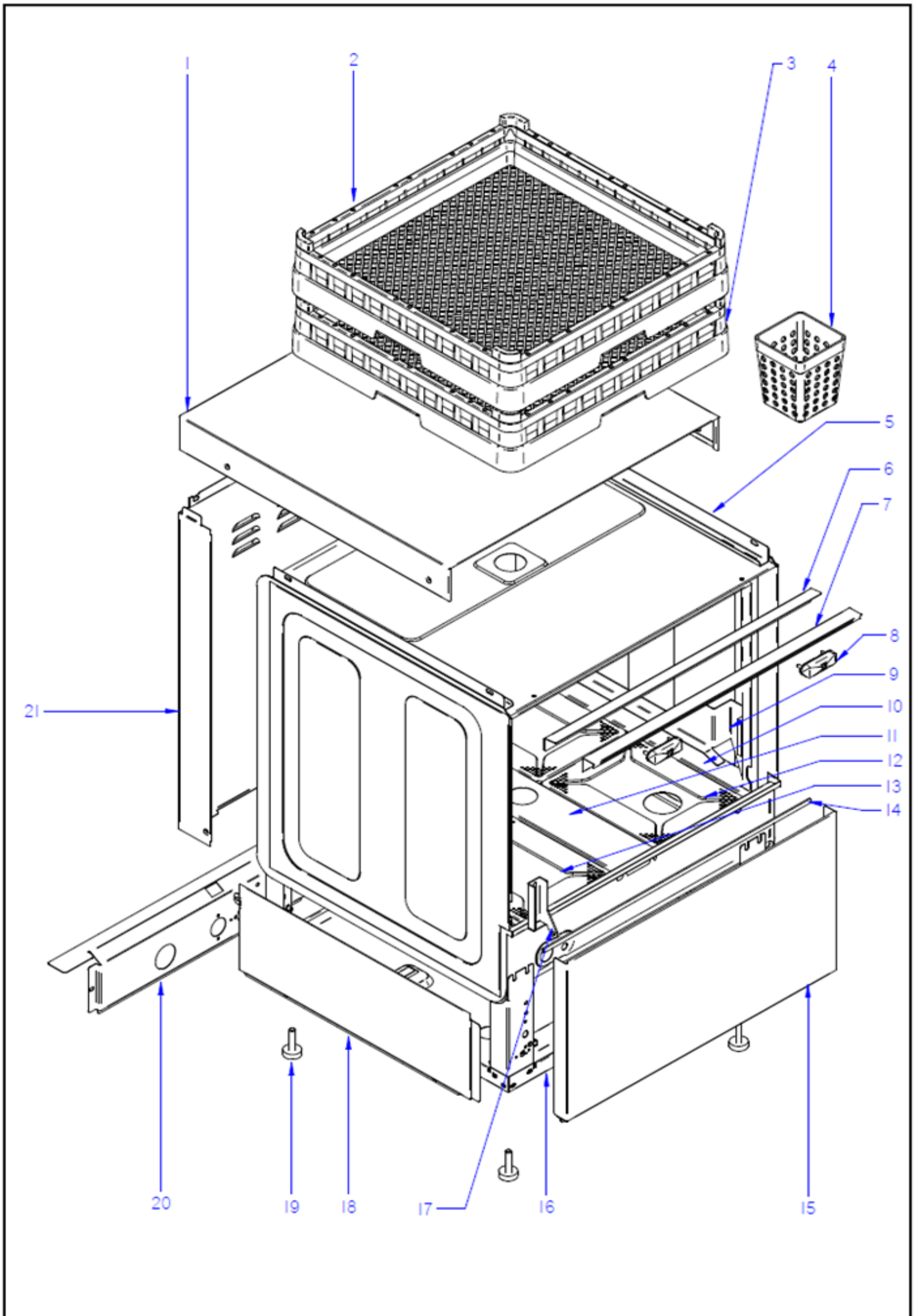

N plano / Drawing N.	Firma / Signature	Fecha / Date	Aparato / Appliance	Lamina / Sheet
UC_01	Filip S.	02/2018	ARMAZON TECH / TECH FRAME FRONT LOADING DW OEM/500	1

ZONA / ZONE	ESTRUCTURA / STRUCTURE	LÁMINA / DRAWING	UC_01

ITEM	REFERENCIA REFERENCE	DENOMINACIÓN	DENOMINATION	GT-OEM-500	GT-OEM-500 DD	GT-OEM-500 B	GT-OEM-500 B DD	GT-OEM-500 W DD	GT-OEM-500 W B DD	GT-OEM-500 F	GT-OEM-500 DD F	GT-OEM-500 B F	GT-OEM-500 B DD F	GT-OEM-500 W DD F	GT-OEM-500 W B DD F	RECOMMENDED	ELIMINADO ELIMINATED	INTRODUCIDO INTRODUCED	NOTAS / NOTES
1	12170241	TAPA G-OEM-500	G-OEM 500 LID	1	1	1	1	1	1	1	1	1	1	1	1				
2	12024990	CESTILLO PLATOS CP-16-18	PLATE BASKET CP-16-18	1	1	1	1	1	1	1	1	1	1	1	1				
3	12023745	CESTILLO CUBIERTOS	CUTLERY BASKET	1	1	1	1	1	1	1	1	1	1	1	1				
4	12025011	CESTILLO BASE CT-10	BASE BASKET CT-10	1	1	1	1	1	1	1	1	1	1	1	1				
5	12170248	SOPORTE TAPA G-OEM-500	G-OEM 500 LID REINFORCEMENT	2	2	2	2	2	2	2	2	2	2	2	2				
6	12024374	PERFIL CAJA	BOX PROFILE	1	1	1	1	1	1	1	1	1	1	1	1				
7	12022469	ESCUADRA SUJECCION PERFIL	FASTENING BRACKET PROFILE	1	1	1	1	1	1	1	1	1	1	1	1				
8	12003212	CONJUNTO CIERRE PUERTA	LOCK CLOSING DEVICE	2	2	2	2	2	2	2	2	2	2	2	2				
9	12170251	GUIA CESTILLO DERECHO	RIGHT BASKET GUIDE	1	1	1	1	1	1	1	1	1	1	1	1				
S/Nº	12170230	GUIA CESTILLO IZQUIERDO	LEFT BASKET GUIDE	1	1	1	1	1	1	1	1	1	1	1	1				
10	12022458	SOPORTE DERECHO BANDEJAS	RIGHT TRAY SUPPORT	_	_	_	_	_	_	1	1	1	1	1	1				
S/Nº	12022459	SOPORTE IZDO. BANDEJAS	LEFT TRAY SUPPORT	_	_	_	_	_	_	1	1	1	1	1	1				
11	12022518	SOPORTE CENTRAL BANDEJAS	TRAY SUPPORT CENTRAL	_	_	_	_	_	_	1	1	1	1	1	1				
12	12131729	BANDEJA FILTRO DESAGÜE	DRAIN FILTER TRAY	_	_	_	_	_	_	1	1	1	1	1	1				
13	12022559	BANDEJA FILTRO	FILTER TRAY	_	_	_	_	_	_	3	3	3	3	3	3				
14	12154932	PERFIL PROTECCION GOMA	TANK PROTECTOR GASKET	1	1	1	1	1	1	1	1	1	1	1	1				
15	12022724	PANEL FRONTAL SIN PUERTA	FRONT PANEL WITHOUT DOOR	1	1	1	1	1	1	1	1	1	1	1	1				
16	12003593	ARMAZON COMPLETO	COMPLETE FRAME	1	1	1	1	1	1	1	1	1	1	1	1				
17	12170261	BISAGRA IZQUIERDA UC-500	UC- LEFT HINGE	1	1	1	1	1	1	1	1	1	1	1	1				
S/Nº	12170242	BISAGRA DERECHA UC-500	UC- RIGHT HINGE	1	1	1	1	1	1	1	1	1	1	1	1				
18	12022560	PANEL LATERAL IZQUIERDO	LEFT SIDE PANEL	1	1	1	1	1	1	1	1	1	1	1	1				
S/Nº	12022563	PANEL LATERAL DERECHO	RIGHT SIDE PANEL	1	1	1	1	1	1	1	1	1	1	1	1				
19	12024163	PATA REGULABLE	ADJUSTABLE LEG	4	4	4	4	4	4	4	4	4	4	4	4				
20	12022395	PANEL POSTERIOR INFERIOR	REAR LOWER PANEL	1	1	1	1	_	_	1	1	1	1	_	_				
20	12022495	PANEL POSTERIOR INFERIOR W	REAR LOWER PANEL W	_	_	_	_	2	2	_	_	_	_	2	2				
21	12170232	PANEL POSTERIOR G-OEM-500	BACK PANEL G-OEM-500	1	1	1	1	_	_	1	1	1	1	_	_				

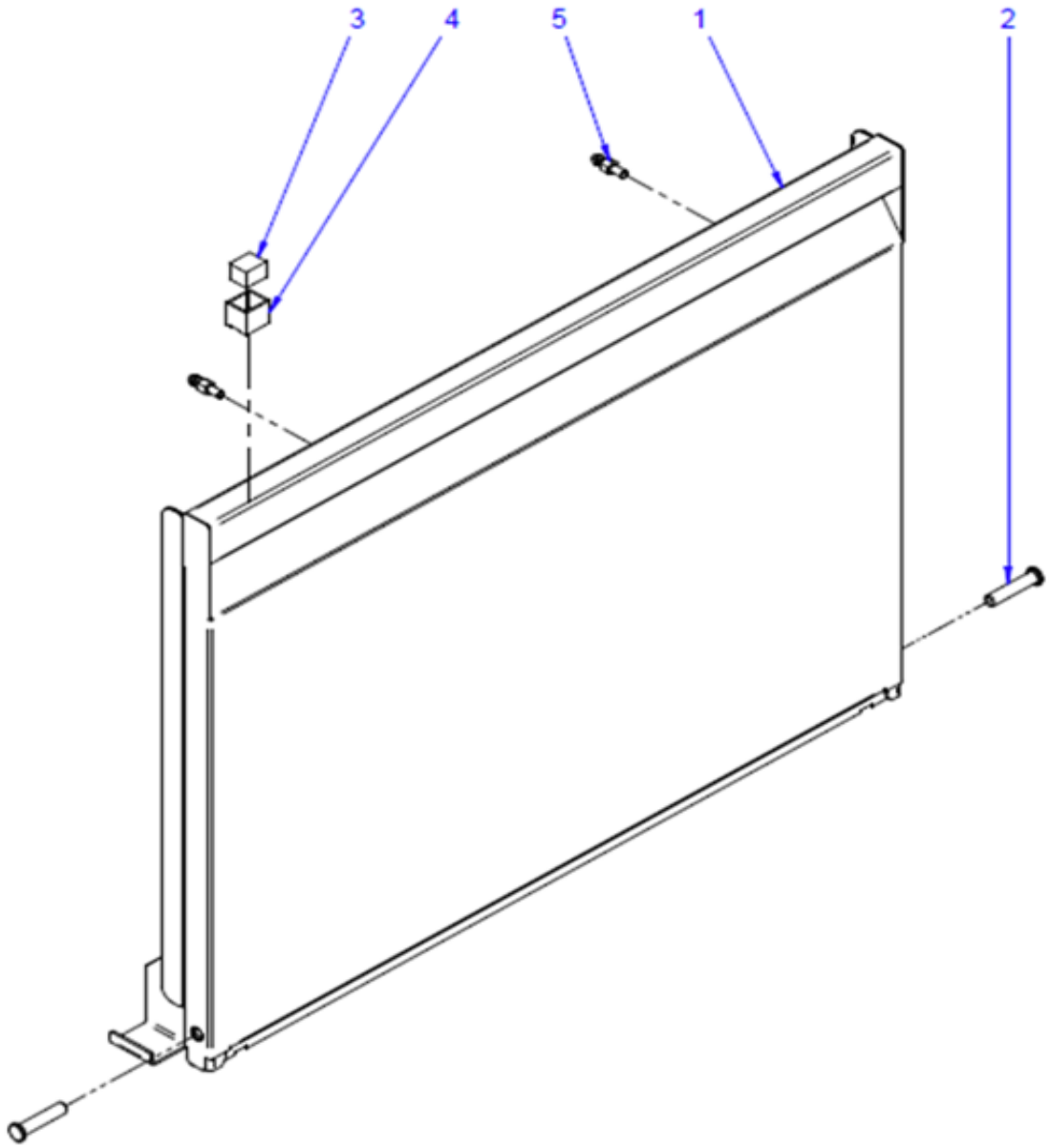

N plano / Drawing N.	Firma / Signature	Fecha / Date	Aparato / Appliance		Lamina / Sheet
UC_03	Filip S.	02/2019	ARMAZON / FRAME	UC	1

ZONA / ZONE	PUERTA / DOOR	LÁMINA / DRAWING	UC_03

ITEM	REFERENCIA REFERENCE	DENOMINACIÓN	DENOMINATION	GT-OEM-500 (All options)												RECOMMENDED	ELIMINADO ELIMINATED	INTRODUCIDO INTRODUCED	NOTAS / NOTES
1	*	PUERTA COMPLETA	COMPLETE DOOR	1															*Check Optionals
2	12184707	EJE PUERTA BISAGRA	DOOR HINGE AXIS PIN	2															
3	12024303	IMAN	MAGNET	1															
4	12024094	PROTECTOR IMAN	MAGNET PROTECTOR	1															
5	12024235	ENGANCHE CIERRE	DOOR CLOSING PIN	2															
S/Nº	12171028	TOPE PUERTA PLÁSTICO	PLASTIC DOOR STOPPER	2															

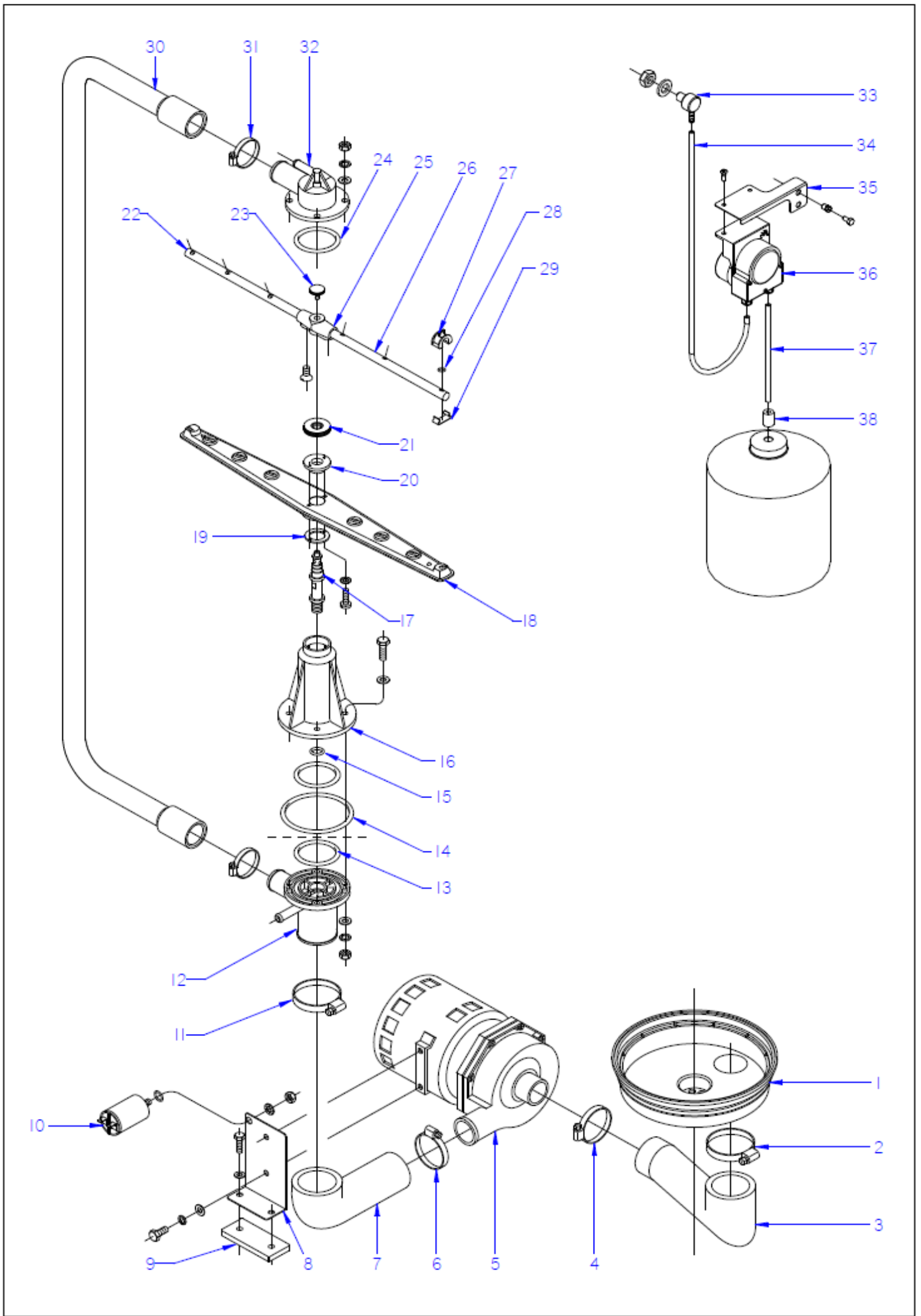

Drawing No.	Signature	Date	Device WASH FUNCTIONAL PART	Sheet
UC_04	Aitor U.	02-2018	FRONT LOADING DW OEM-500	4

ZONA / ZONE	WASHING FUNCTIONAL PART	LÁMINA / DRAWING	UC_04

ITEM	REFERENCIA REFERENCE	DENOMINACIÓN	DENOMINATION	GT-OEM-500	GT-OEM-500 DD	GT-OEM-500 B	GT-OEM-500 B DD	GT-OEM-500 SA	GT-OEM-500 DD SA	GT-OEM-500 B SA	GT-OEM-500 B DD SA	GT-OEM-500 W DD	GT-OEM-500 W B DD	GT-OEM-500 W DD SA	GT-OEM-500 W B DD SA	RECOMMENDED	ELIMINADO ELIMINATED	INTRODUCIDO INTRODUCED	NOTAS / NOTES
1	12024367	CUBETA	TRAY	1	1	1	1	1	1	1	1	1	1	1	1				
2	12009933	ABRAZADERA 50-70L	CLAMP 50-70L	1	1	1	1	1	1	1	1	1	1	1	1				
3	12023683	CODO ASPIRACION 1003018	EXTRACTOR ELBOW 1003018	1	1	1	1	1	1	1	1	1	1	1	1				
4	12009962	ABRAZADERA 40-60	CLAMP 40-60	1	1	1	1	1	1	1	1	1	1	1	1				
5	12043287	BOMBA DE LAVADO **50Hz**	WASH PUMP **50Hz**	1	1	1	1	1	1	1	1	1	1	1	1	X			
5	12102834	BOMBA DE LAVADO **60Hz**	WASH PUMP **60Hz**	1	1	1	1	1	1	1	1	1	1	1	1	X			
6	12009962	ABRAZADERA 40-60	CLAMP 40-60	1	1	1	1	1	1	1	1	1	1	1	1				
7	12023689	CODO IMPULSION 1003017	IMPULSE ELBOW 1003017	1	1	1	1	1	1	1	1	1	1	1	1				
8	12022393	SOPORTE MOTOBO.F-3-4-5-6	MOTORPUMP SUPPORT F-3-4-5-6	1	1	1	1	1	1	1	1	1	1	1	1				
9	12023556	BASE BOMBA LAVADO 1003016	WASH PUMP BASE 1003016	1	1	1	1	1	1	1	1	1	1	1	1				
10	12024376	CONDENSADOR 10 M.F.	CONDENSER 10 M.F.	1	1	1	1	1	1	1	1	1	1	1	1				
11	12009933	ABRAZADERA 50-70L	CLAMP 50-70L	1	1	1	1	1	1	1	1	1	1	1	1				
12	12023613	PASAMUROS	BUSHING	1	1	1	1	1	1	1	1	1	1	1	1	X			
13	12010079	JUNTA TOR.50.17X60.83X5.3	O-RING 50.17X60.83X5.3	1	1	1	1	1	1	1	1	1	1	1	1				
14	12009976	JUNTA TOR.85.09X95.75X5.3	O-RING 85.09X95.75X5.3	2	2	2	2	2	2	2	2	2	2	2	2				
15	12009837	JUNTA TOR.13.94X19.18X2.6	O-RING 13.94X19.18X2.6	1	1	1	1	1	1	1	1	1	1	1	1				
16	12024480	SOPORTE DISTRIBUID. INFERIOR	LOWER DISTRIBUTOR SUPPORT	1	1	1	1	1	1	1	1	1	1	1	1	X			
17	12023844	EJE CENTRAL	CENTRAL SHAFT	2	2	2	2	2	2	2	2	2	2	2	2				
18	12025122	DISTRIBUIDOR MONTADO	DISTRIBUTOR MOUNTED	2	2	2	2	2	2	2	2	2	2	2	2				
19	12024289	AMARRE ENGANCHE DISTRIBUID.	DISTRIBUTOR HOOK	2	2	2	2	2	2	2	2	2	2	2	2				
20	12110631	ENGANCHE DISTRIBUIDOR	MOTORPUMP SUPPORT F-3-4-5-6	2	2	2	2	2	2	2	2	2	2	2	2				
21	12024375	TUERCA ESPECIAL M.14X1	SPECIAL NUT M.14X1	2	2	2	2	2	2	2	2	2	2	2	2				
22	12023524	RAMA DE ACLARADO IZQUIERDA	LEFT RINSE BRANCH	2	2	2	2	_	_	_	_	2	2	_	_				
22	12113595	RAMA DE ACLARADO IZQUIERDA SS	LEFT RINSE BRANCH SS	_	_	_	_	2	2	2	2	_	_	2	2				
23	12009829	TORNILLO ESPECIAL M.5X0.8	SPECIAL BOLT M.5X0.8	2	2	2	2	2	2	2	2	2	2	2	2				
24	12010079	JUNTA TOR.50.17X60.83X5.3	O-RING 50.17X60.83X5.3	1	1	1	1	1	1	1	1	1	1	1	1				
25	12024470	SOPORTE RAMAS ACLARADO	RINSE BRANCH SUPPORT	2	2	2	2	2	2	2	2	2	2	2	2				
26	12023527	RAMA DE ACLARADO DERECHA	RIGHT RINSE BRANCH	2	2	2	2	_	_	_	_	2	2	_	_				
26	12113596	RAMA DE ACLARADO DERECHA SS	RIGHT RINSE BRANCH SS	_	_	_	_	2	2	2	2	_	_	2	2				
27	12024077	TOBERA ACLARADO	RINSE NOZZLE	12	12	12	12	_	_	_	_	12	12	_	_				

ZONA / ZONE	WASHING FUNCTIONAL PART	LÁMINA / DRAWING	UC_04

ITEM	REFERENCIA REFERENCE	DENOMINACIÓN	DENOMINATION	GT-OEM-500	GT-OEM-500 DD	GT-OEM-500 B	GT-OEM-500 B DD	GT-OEM-500 SA	GT-OEM-500 DD SA	GT-OEM-500 B SA	GT-OEM-500 B DD SA	GT-OEM-500 W	GT-OEM-500 W DD	GT-OEM-500 W B	GT-OEM-500 W B DD	RECOMMENDED	ELIMINADO ELIMINATED	INTRODUCIDO INTRODUCED	NOTAS NOTES
27	12024252	TOBERA ACLARADO SS	RINSE NOZZLE SS	_	_	_	_	12	12	12	12	_	_	12	12				
28	12009912	JUNTA TORICA 5.28X8.84X1.78	O-RING 5.28X8.84X1.78	12	12	12	12	_	_	_	_	12	12	_	_				
29	12024006	ENGANCHE TOBERA ACLARADO	RINSE NOZZLE HOOK	12	12	12	12	_	_	_	_	12	12	_	_				
30	12023699	ARBOL DE LAVADO	WASH CAM	1	1	1	1	1	1	1	1	1	1	1	1				
31	12009997	ABRAZADERA 25-40	CLAMP 25-40	2	2	2	2	2	2	2	2	2	2	2	2				
32	12024471	SOPORTE DISTRIBUIDOR SUPER.	UPPER DISTRIBUTION SUPPORT	1	1	1	1	1	1	1	1	1	1	1	1	X			
33	12024531	PASAMUROS INOX DETERGENTE	INOX DETERGENT WALL BUSHING	_	1	_	1	_	1	_	1	1	1	1	1				
34	11000079	CONDUCTO DOSIF. TRANSPARENTE	TRANSPAR. EXTRACTOR PIPE	_	1	_	1	_	1	_	1	1	1	1	1				
35	12176078	SOPORTE DOSIFICADOR	FEEDER SUPPORT	_	1	_	1	_	1	_	1	1	1	1	1				
36	12133011	DOSIFI. DGTE REGULABLE	ADJUST.DETERGENT DISPENSER	_	1	_	1	_	1	_	1	_	1	_	1	X			
37	12181601	DOSIFI. DGTE. ABRILLANTA.	DETER. & RINSE DISPENSER	_	_	_	_	_	_	_	_	1	1	1	1		28.02.2019		
37	12132254	Dispensador de aclarado	Electric Rinse dispenser	_	_	_	_	_	_	_	_	1	1	1	1	X		28/02/2019	
38	12164632	PESO FILTRO	FILTER WEIGHT	_	1	_	1	_	1	_	1	1	1	1	1				

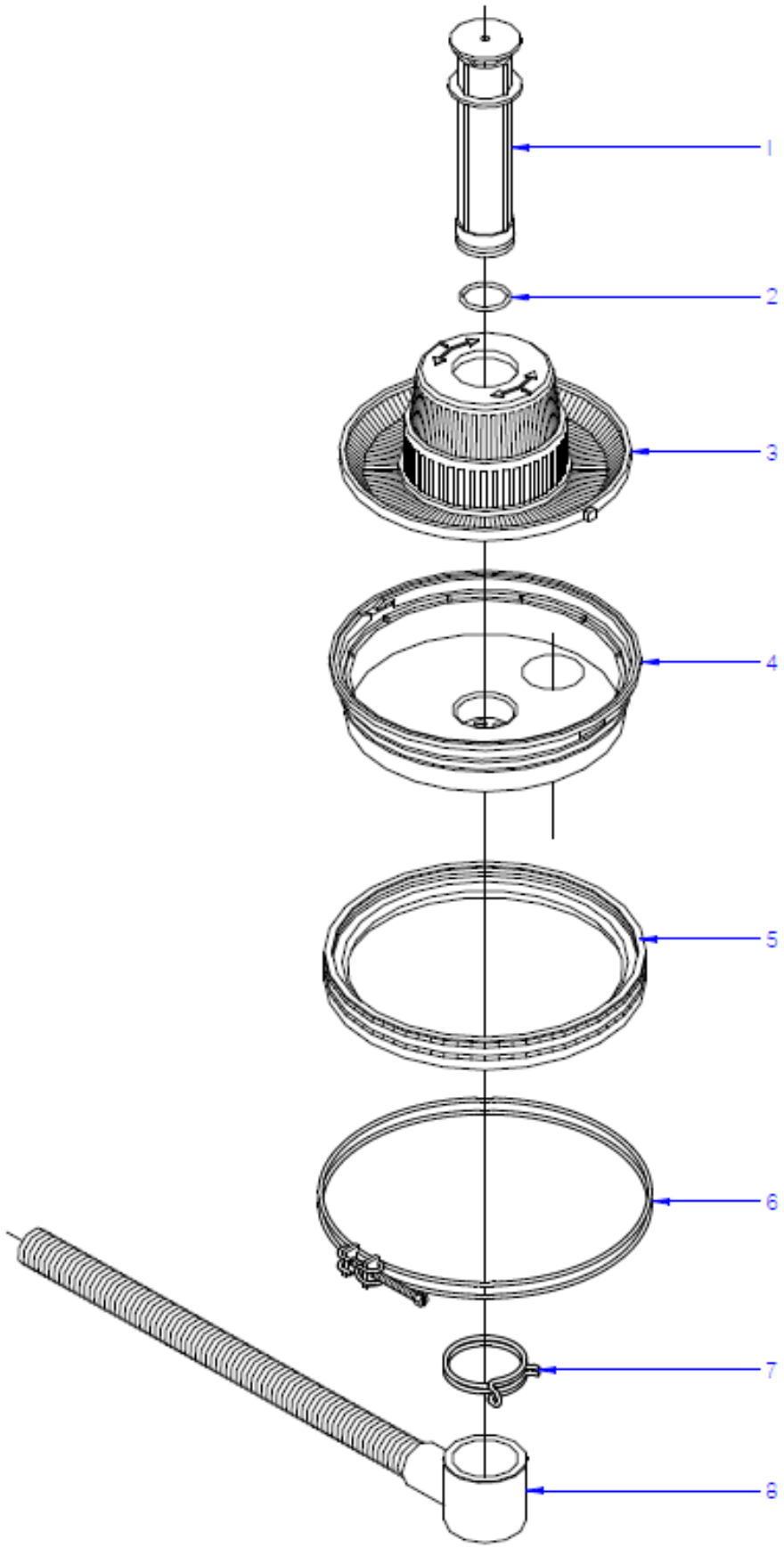

Drawing No.	Signature	Date	Device GRAVITY DRAINAGE FUNCTIONAL PART	Sheet
UC_05	Aitor U.	02-2018	FRONT LOADING DW OEM-500	5

ZONA / ZONE	GRAVITY DRAINAGE FUNCTIONAL PART	LÁMINA / DRAWING	UC_05

ITEM	REFERENCIA REFERENCE	DENOMINACIÓN	DENOMINATION	GT-OEM-500	GT-OEM-500 DD	GT-OEM-500 DD SA	GT-OEM-500 W DD	GT-OEM-500 W DD SA	GT-OEM-500 SOFT	GT-OEM-500 SOFT DD	GT-OEM-500 SOFT DD SA						ELIMINADO ELIMINATED	INTRODUCIDO INTRODUCED	NOTAS / NOTES
1	12153291	ALIVIADERO UC 500	Overflow Cork UC 500	1	1	1	1	1	1	1	1								
2	12010165	JUNTA TOR.36.17X41.41X2.6	O-RING 36.17X41.41X2.6	1	1	1	1	1	1	1	1								
3	12024410	CONJUNTO FILTRO AF.	FILTER AF.	1	1	1	1	1	1	1	1								
4	12024367	CUBETA	TRAY	1	1	1	1	1	1	1	1								
5	12024556	JUNTA CUBETA	TRAY SEAL	1	1	1	1	1	1	1	1								
6	12023841	ABRAZADERA CUBETA COMPL.	TRAY CLAMP	1	1	1	1	1	1	1	1								
7	12009962	ABRAZADERA 40-60	CLAMP 40-60	1	1	1	1	1	1	1	1								
8	12024473	MANGUERA DESAGUE	DRAINAGE HOSE	1	1	1	1	1	1	1	1								

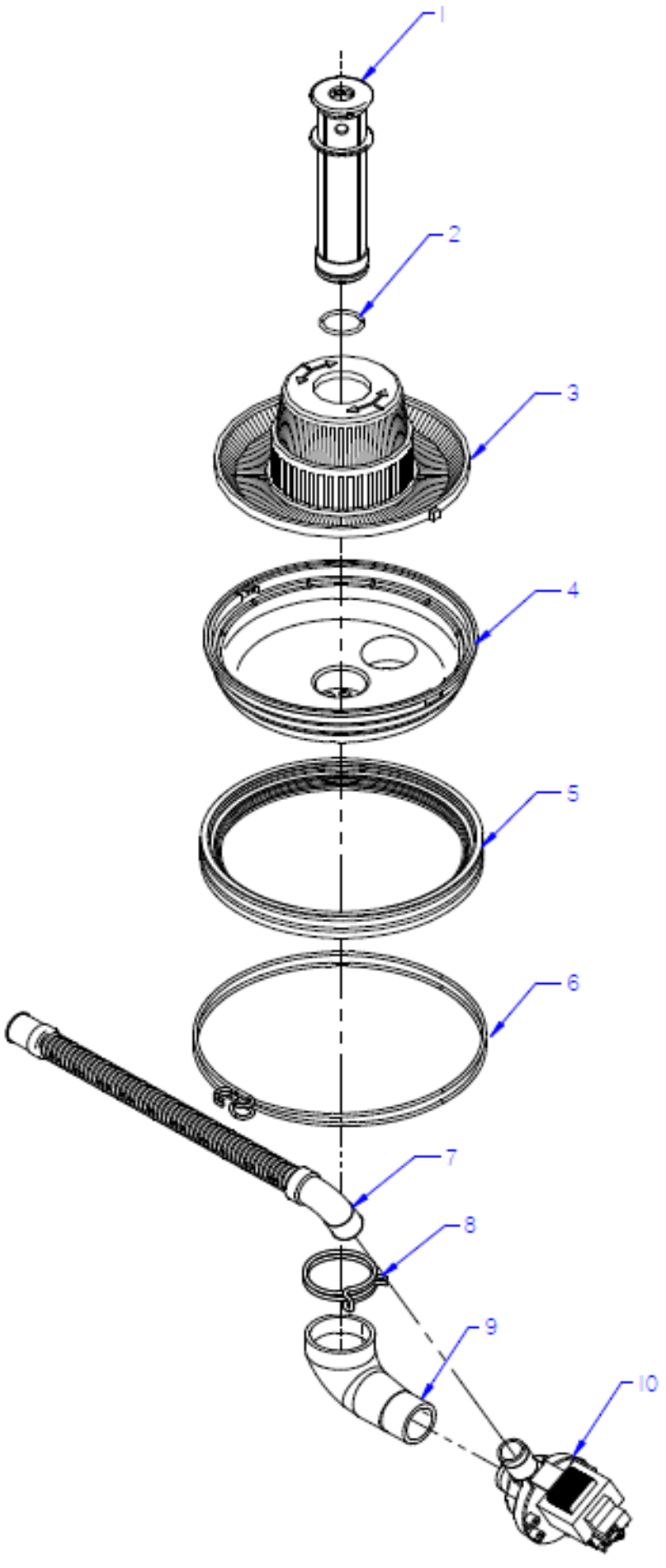

Drawing No.	Signature	Date	Device DRAIN PUMP DRAINAGE FUNCTIONAL PART	Sheet
UC_06	Aitor U.	02-2018	FRONT LOADING DW OEM-500	6

ZONA / ZONE	DRAIN PUMP DRAINAGE FUNCTIONAL PART	LÁMINA / DRAWING	UC_06

ITEM	REFERENCIA REFERENCE	DENOMINACIÓN	DENOMINATION	GT-OEM-500 B	GT-OEM-500 B DD	GT-OEM-500 B DD SA	GT-OEM-500 W B DD	GT-OEM-500 W B DD SA	GT-OEM-500 SOFT B	GT-OEM-500 SOFT B DD	GT-OEM-500 SOFT B DD SA					RECOMMENDED	ELIMINADO ELIMINATED	INTRODUCIDO INTRODUCED	NOTAS / NOTES
1	12153290	ALIVIADERO UC-500 MOD.B	OVERFLOW CORK UC-500 MOD. B	1	1	1	1	1	1	1	1								
2	12010165	JUNTA TOR.36.17X41.41X2.6	O-RING 36.17X41.41X2.6	1	1	1	1	1	1	1	1								
3	12024410	CONJUNTO FILTRO AF.	FILTER AF.	1	1	1	1	1	1	1	1								
4	12024367	CUBETA	TRAY	1	1	1	1	1	1	1	1								
5	12024556	JUNTA CUBETA	TRAY SEAL	1	1	1	1	1	1	1	1								
6	12023841	ABRAZADERA CUBETA COMPL.	TRAY CLAMP	1	1	1	1	1	1	1	1								
7	12023666	MANGUERA DESAGUE	DRAINAGE HOSE	1	1	1	1	1	1	1	1								
8	12009962	ABRAZADERA 40-60	CLAMP 40-60	1	1	1	1	1	1	1	1								
9	12091075	CONDUCTO ASPIRACION BOMBA	PUMP VACUUM PIPE	1	1	1	1	1	1	1	1								
10	12094265	MOTOBOMBA 220V AC 1N 50/60Hz	MOTOR PUMP 37KW 220V AC 1N	1	1	1	1	1	1	1	1						24/10/2023		
10	12094265	MOTOBOMBA 220V AC 1N 50/60Hz	MOTOR PUMP 37KW 220V AC 1N	1	1	1	1	1	1	1	1					X		24/10/2023	Alternative 12094265

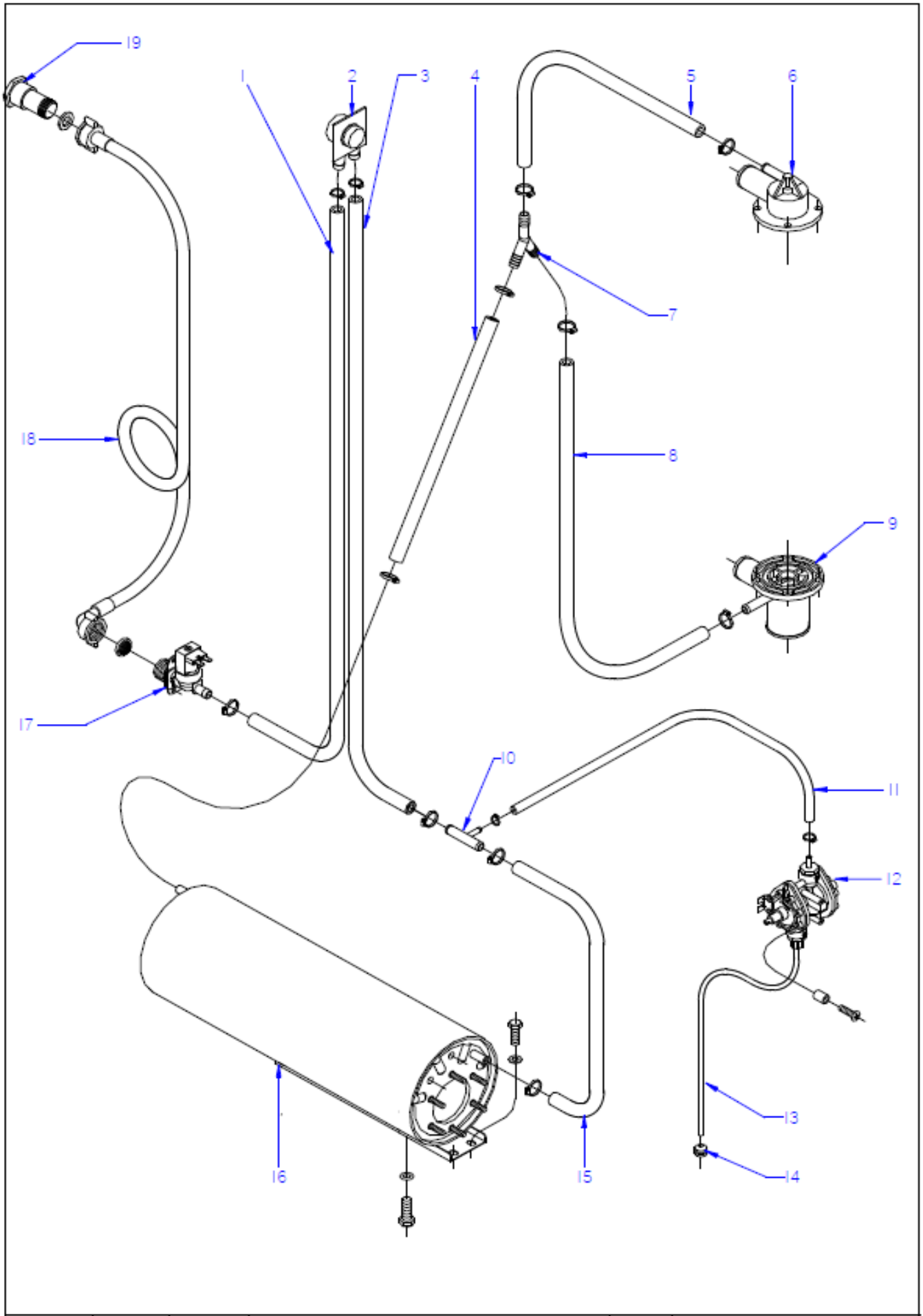

Drawing No.	Signature	Date	Device	RINSING FUNCTIONAL PART	Sheet
UC_07	Aitor U.	02-2018	FRONT LOADING DW OEM-500		7

ZONA / ZONE	PARTE FUNCIONAL ACLARADO / RINSING FUNCTIONAL PART	LÁMINA / DRAWING	UC_07

ITEM	REFERENCIA REFERENCE	DENOMINACIÓN	DENOMINATION	GT-OEM-500	GT-OEM-500 DD	GT-OEM-500 B	GT-OEM-500 B DD	GT-OEM-500 SA	GT-OEM-500 DD SA	GT-OEM-500 B SA	GT-OEM-500 B DD SA					RECOMMENDED	ELIMINADO ELIMINATED	INTRODUCIDO INTRODUCED	NOTAS / NOTES
1	12153568	CONDUCTO EV-ANTIRETORNO	EV - ANTIRETURN VALVE HOSE	1	1	1	1	1	1	1	1								
2	12184836	VALVULA ANTIRRETORNO	NON-RETURN VALVE	1	1	1	1	1	1	1	1								
3	12153570	CONDUCTO ANTIRETORNO-T	NON-RETURN - T FITTING HOSE	1	1	1	1	1	1	1	1								
4	12153571	CONDUCTO CALDERIN Y	BOILER - Y RACORD HOSE	1	1	1	1	1	1	1	1								
5	12153573	CONDUCTO ACLARADO SUPERIOR	UPPER RINSE HOSE	1	1	1	1	1	1	1	1								
6	12024471	SOPORTE DISTRIB. SUPERIOR	UPPER DISTRIB. SUPPORT	1	1	1	1	1	1	1	1								
7	12023511	RACORD EN Y	Y CONNECTION	1	1	1	1	1	1	1	1								
8	12153572	CONDUCTO ACLARADO INFERIOR	LOWER RINSE HOSE UC-500	2	2	2	2	2	2	2	2								
9	12023613	PASAMUROS	FEEDTHROUGH	1	1	1	1	1	1	1	1								
S/Nº	12041731	ABRAZADERA 12-20	CLAMP 12/20	12	12	12	12	12	12	12	12								
10	12025288	TOMA PRESION	PRESSURE INTAKE	1	1	1	1	1	1	1	1								
11	12153565	CONDUCTO SALIDA ABRILLANTA.	RINSE OUTLET HOSE	1	1	1	1	1	1	1	1								
S/Nº	12010047	ABRAZADERA 8-14L	CLAMP 8-14L	2	2	2	2	2	2	2	2								
12	121330010	DOSIFICADOR ABRILLANTADOR	RINSE AID DISPENSER	1	1	1	1	1	1	1	1					X			
13	12092499	CONDUCTO ABRILLANTADOR	POLISH DUCT	1	1	1	1	1	1	1	1								
14	12024353	PESO FILTRO	FILTER WEIGHT	1	1	1	1	1	1	1	1								
15	12153569	CONDUCTO T - CALDERIN	T FITTING - BOILER HOSE	1	1	1	1	1	1	1	1								
16	12022943	CALDERIN COMPLETO	COMPL. BOILER	1	1	1	1	1	1	1	1						01/05/2023		LJ320021
16	12311564	CALDERIN COMPLETO	COMPL. BOILER	1	1	1	1	1	1	1	1							01/05/2023	LJ320021
17	12025161	ELECTR. SIMP.220V COD.255.208	SIMPLE SOLENOID VALVE	1	1	1	1	1	1	1	1					X			
18	12024115	MANGUERA ENTRADA AGUA	WATER INTAKE HOSE	1	1	1	1	1	1	1	1								
18	12115397	MANGUERA ENTR. WATERMARK	WATERMARK INTAKE HOSE	1	1	1	1	1	1	1	1								
19	12115508	VALVULA ANTIRR. WATERMARK	NON-RET. VALVE WATERMARK	1	1	1	1	1	1	1	1								
19	12115508	VALVULA ANTIRR. WATERMARK	NON-RET. VALVE WATERMARK	1	1	1	1	1	1	1	1								

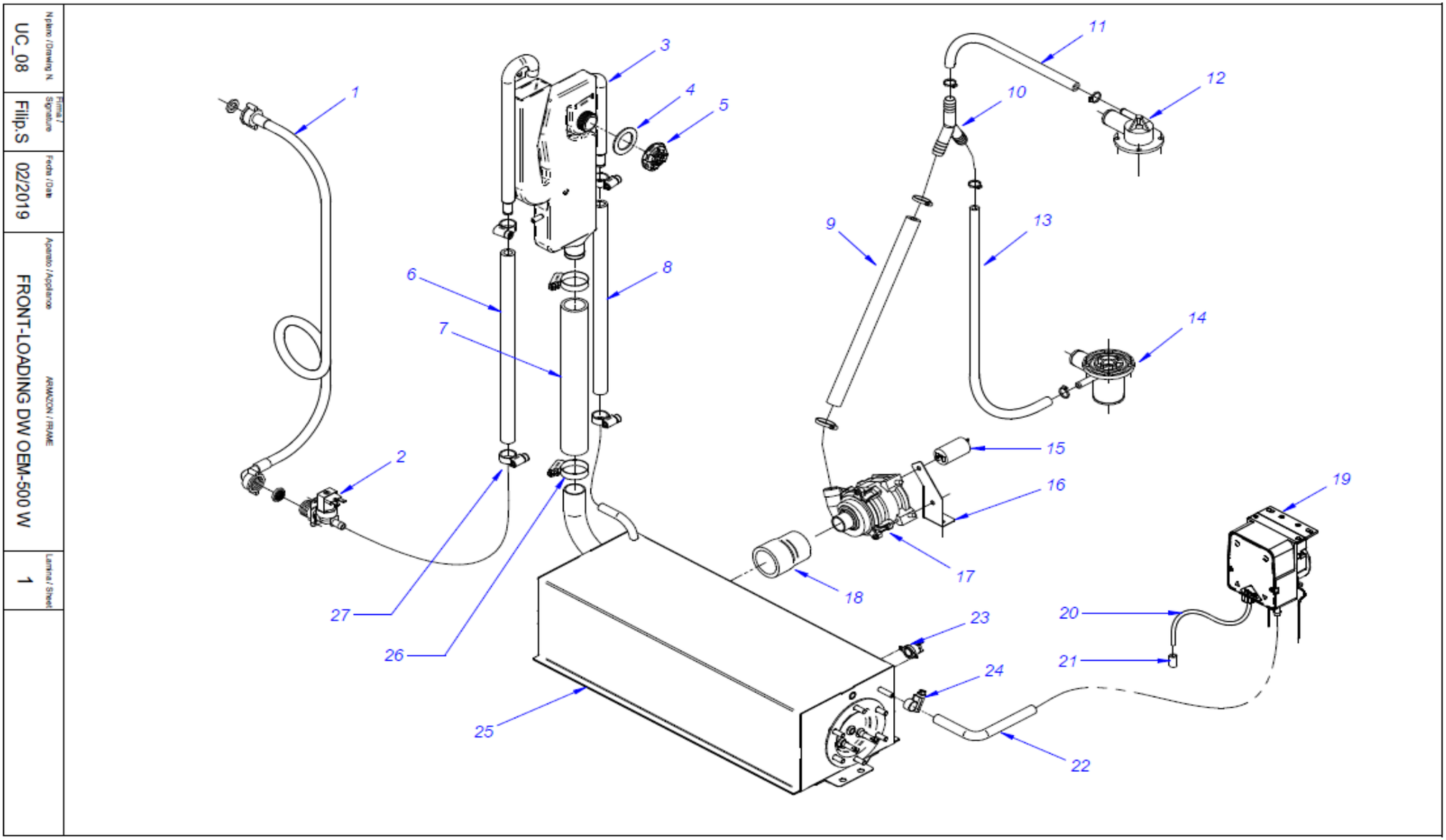
N.plano / Drawing N
UC_08
Firma / Signature
Filip.S
Fecha / Date
02/2019
Aparato / Appliance
FRONT-LOADING DW OEM-500 W
ARMAZON / FRAME
Lamina / Sheet
1
1
2
3
4
5
6
7
8
9
10
11
12
13
14
15
16
17
18
19
20
21
22
23
24
25
26
27

ZONA / ZONE	PARTE FUNCIONAL ACLARADO CON BOMBA /PUMP RINSING FUNCTIONAL PART	LÁMINA / DRAWING	UC_08

ITEM	REFERENCIA REFERENCE	DENOMINACIÓN	DENOMINATION	GT-OEM-500 W DD	GT-OEM-500 W B DD	GT-OEM-500 W DD SA	GT-OEM-500 W B DD SA	GT-OEM-500 W DD UK	GT-OEM-500 W B DD UK	GT-OEM-500 W DD SA UK	GT-OEM-500 W B DD SA UK					RECOMMENDED	ELIMINADO ELIMINATED	INTRODUCIDO INTRODUCED	NOTAS / NOTES
1	12024115	MANGUERA ENTRADA AGUA	WATER INTAKE HOSE	1	1	1	1	1	1	1	1								
2	12025161	ELECTROVÁLVULA SIMPLE	SIMPLE SOLENOID VALVE	1	1	1	1	1	1	1	1					X			
S/Nº	12224766	REGULADOR DE ENTRADA 4L	INNER REGULATOR 4L	1	1	1	1	1	1	1	1								
3	12163791	Break-Tank de plástico	Plastic Air-gap tank	1	1	1	1	1	1	1	1								
4	12091122	Junta break tank plástico	Plastic air-break tank gasket	1	1	1	1	1	1	1	1								
5	12104339	Tuerca break tank plástico	Plastic air-break tank NUT	1	1	1	1	1	1	1	1								
6	12153666	Conducto EV-Break tank	EV-BT Hose	1	1	1	1	1	1	1	1								
7	12227400	Conducto Caldrin - Break tank	Boiler - BT rubber conduit	1	1	1	1	1	1	1	1								
8	12153667	Conducto salida vapores Calderin	Boiler Steam Outlet	1	1	1	1	1	1	1	1								
9	12023763	MANGUERA ENJUAGUE BOMBA	RINSE PUMP HOSE	1	1	1	1	1	1	1	1								
10	12023511	RACORD EN Y	Y-CONNECTION	1	1	1	1	1	1	1	1								
11	12153573	CONDUCTO ACLAR. SUPERIOR	UPPER RINSE HOSE UC 500	1	1	1	1	1	1	1	1								
12	12024471	SOPORTE DISTRIBUIDOR SUPER.	UPPER DISTRIB. SUPPORT	1	1	1	1	1	1	1	1								
13	12153572	CONDUCTO ACLAR. INFERIOR	LOWER RINSE HOSE UC 500	1	1	1	1	1	1	1	1								
14	12023613	PASAMUROS	BUSHING	1	1	1	1	1	1	1	1								
15	12023600	CONDENSADOR 400V VDE	CONDENSER 400V VDE	1	1	1	1	1	1	1	1								
16	12022169	SOPORTE BOMBA ACLARADO	RINSING PUMP HOLDER	1	1	1	1	1	1	1	1								
17	12024233	BOMBA ACLARADO	RINSE PUMP	1	1	1	1	1	1	1	1					X			
18	12024437	MANGUITO REDUCCIÓN	REDUCTION HOSE	1	1	1	1	1	1	1	1								
19	12181601	DOSIFI. DGTE. ABRILLANTA.	DETER. & RINSE DISPENSER	1	1	1	1	1	1	1	1						28/02/2019		
19	12132254	Dispensador de aclarado	Electric Rinse dispenser	1	1	1	1	1	1	1	1					X		28/02/2019	
20	12092499	Conducto abrillantador	Rinse suction conduit	1	1	1	1	1	1	1	1								
21	12164632	PESO FILTRO	FILTER WEIGHT	1	1	1	1	1	1	1	1								
22	12227921	Conducto dispensador-calderin	Rinse dispenser hose to UC boiler	1	1	1	1	1	1	1	1								
23	12285236	TERMOSTATO LIMITADOR	SECURITY THERMOSTAT	2	2	2	2	2	2	2	2								
24	12010047	ABRAZADERA 8-14L	CLAMP 8-14L	2	2	2	2	2	2	2	2								
25	12232586	Calderin cuadrado completo	Square boiler complete	1	1	1	1	1	1	1	1						01/05/2023		LJ320021
25	12312172	Calderin cuadrado cpl 2,8 kW	Square boiler 2,8 kW	1	1	1	1	_	_	_	_							01/05/2023	LJ320021
25	12312118	Calderin cuadrado cpl 2,2 kW	Square boiler 2,2 kW UK	_	_	_	_	1	1	1	1							01/05/2023	LJ320021
26	12009997	ABRAZADERA 25-40 mm	SS Clamp 25-40 mm	4	4	4	4	4	4	4	4								
27	12041731	ABRAZADERA 12-22 mm	SS Clamp 12-22 mm	10	10	10	10	10	10	10	10								

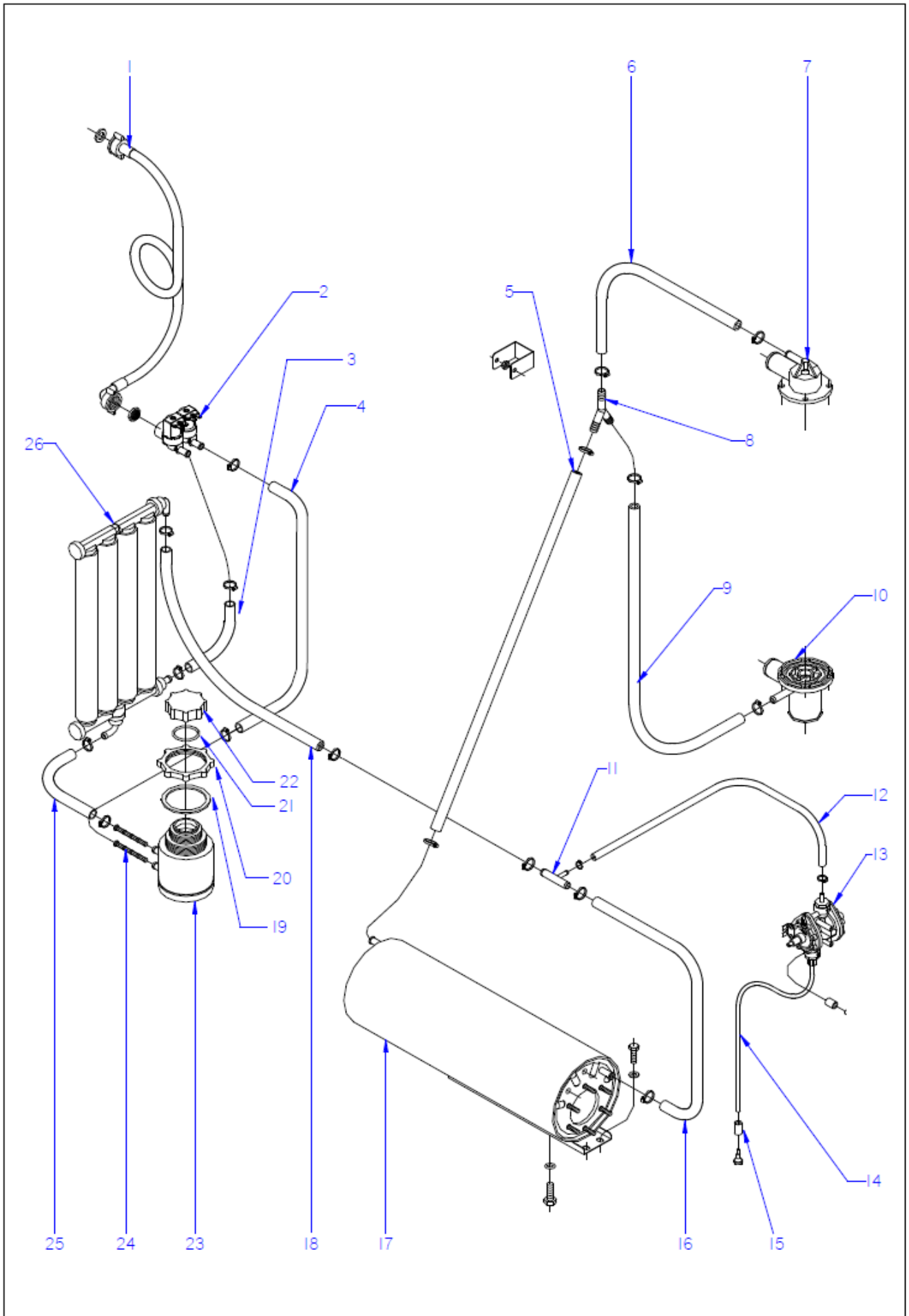

Drawing No.	Signature	Date	Device	SOFT RINSE FUNCTIONAL PART	Sheet
UC_09	Aitor U.	02-2018	FRONT LOADING DW OEM-500		9

ZONA / ZONE	PARTE FUNCIONAL REGENERACION / WATER SOFTENERFUNCTIONAL PART	LÁMINA / DRAWING	UC_09

ITEM	REFERENCIA REFERENCE	DENOMINACIÓN	DENOMINATION	GT-OEM-500 SOFT	GT-OEM-500 SOFT DD	GT-OEM-500 SOFT B	GT-OEM-500 SOFT B DD	GT-OEM-500 SOFT UK	GT-OEM-500 SOFT DD UK	GT-OEM-500 SOFT B UK	GT-OEM-500 SOFT B DD UK					RECOMMENDED	ELIMINADO ELIMINATED	INTRODUCIDO INTRODUCED	NOTAS / NOTES
1	12024115	MANGUERA ENTRADA AGUA	WATER INTAKE HOSE	1	1	1	1	1	1	1	1								
2	12023794	ELECTROVALVULA DOBLE	2 WAY ELECTROVALVE	1	1	1	1	1	1	1	1								
3	11000083	CONDUCTO EV-RESINAS	EV-RESINS HOSE	1	1	1	1	1	1	1	1								
4	11000083	CONDUCTO EV- BOTE DE SALES	EV-SALT CAN HOSE	1	1	1	1	1	1	1	1								
5	12153571	CONDUCTO CALDERIN Y	BOILER - Y RACORD HOSE	1	1	1	1	1	1	1	1								
6	12153573	CONDUCTO ACLARADO SUPERIOR	UPPER RINSE HOSE	1	1	1	1	1	1	1	1								
7	12024471	SOPORTE DISTRIB. SUPERIOR	UPPER DISTRIB. SUPPORT	1	1	1	1	1	1	1	1								
8	12023511	RACORD EN Y	Y CONNECTION	1	1	1	1	1	1	1	1								
9	12153572	CONDUCTO ACLARADO INFERIOR	LOWER RINSE HOSE UC-500	2	2	2	2	2	2	2	2								
10	12023613	PASAMUROS	FEEDTHROUGH	1	1	1	1	1	1	1	1								
S/Nº	12041731	ABRAZADERA 12-20	CLAMP 12/20	12	12	12	12	12	12	12	12								
11	12025288	TOMA PRESION	PRESSURE INTAKE	1	1	1	1	1	1	1	1								
12	12153565	CONDUCTO SALIDA ABRILLANTA.	RINSE OUTLET HOSE	1	1	1	1	1	1	1	1								
S/Nº	12010047	ABRAZADERA 8-14L	CLAMP 8-14L	2	2	2	2	2	2	2	2								
13	121330010	DOSIFICADOR ABRILLANTADOR	RINSE AID DISPENSER	1	1	1	1	1	1	1	1								
14	12092499	CONDUCTO ABRILLANTADOR	POLISH DUCT	1	1	1	1	1	1	1	1								
15	12024353	PESO FILTRO	FILTER WEIGHT	1	1	1	1	1	1	1	1								
16	12153569	CONDUCTO T - CALDERIN	T FITTING - BOILER HOSE	1	1	1	1	1	1	1	1								
17	12022943	CALDERIN COMPLETO	COMPL. BOILER	1	1	1	1	1	1	1	1						01/05/2023		LJ320021
17	12311564	CALDERIN COMPLETO	COMPL. BOILER	1	1	1	1	1	1	1	1							01/05/2023	LJ320021
18	11000083	CONDUCTO RESINAS - UNION T	RESINS - T FITTING HOSE	1	1	1	1	1	1	1	1								
19	12047154	JUNTA TUERCA DEPOSITO SALES	SALT CAN GASKET	1	1	1	1	1	1	1	1								
20	12025272	TUERCA SUJECCION BOTE DE SALES	SALT CAN FIXING NUT	1	1	1	1	1	1	1	1								
21	12024031	JUNTA TAPON	SALT CAN PLUG O-RING	1	1	1	1	1	1	1	1								
22	12025273	TAPON BOTE DE SALES	SALT CAN PLUG	1	1	1	1	1	1	1	1								
23	12113090	BOTE_SALES_SENSOR	SALT CAN WITH SENSOR	1	1	1	1	1	1	1	1								
24	12023847	FILTRO BOTE DE SALES	SALT CAN FILTERS	2	2	2	2	2	2	2	2					X			
25	11000083	CONDUCTO RESINAS - BOTE SALES	RESINS - SALT CAN HOSE	1	1	1	1	1	1	1	1								
26	12024874	DESCALCIFICADOR 4 COLUMNAS	4 COLUMNS WATER SOFTENER	1	1	1	1	1	1	1	1								

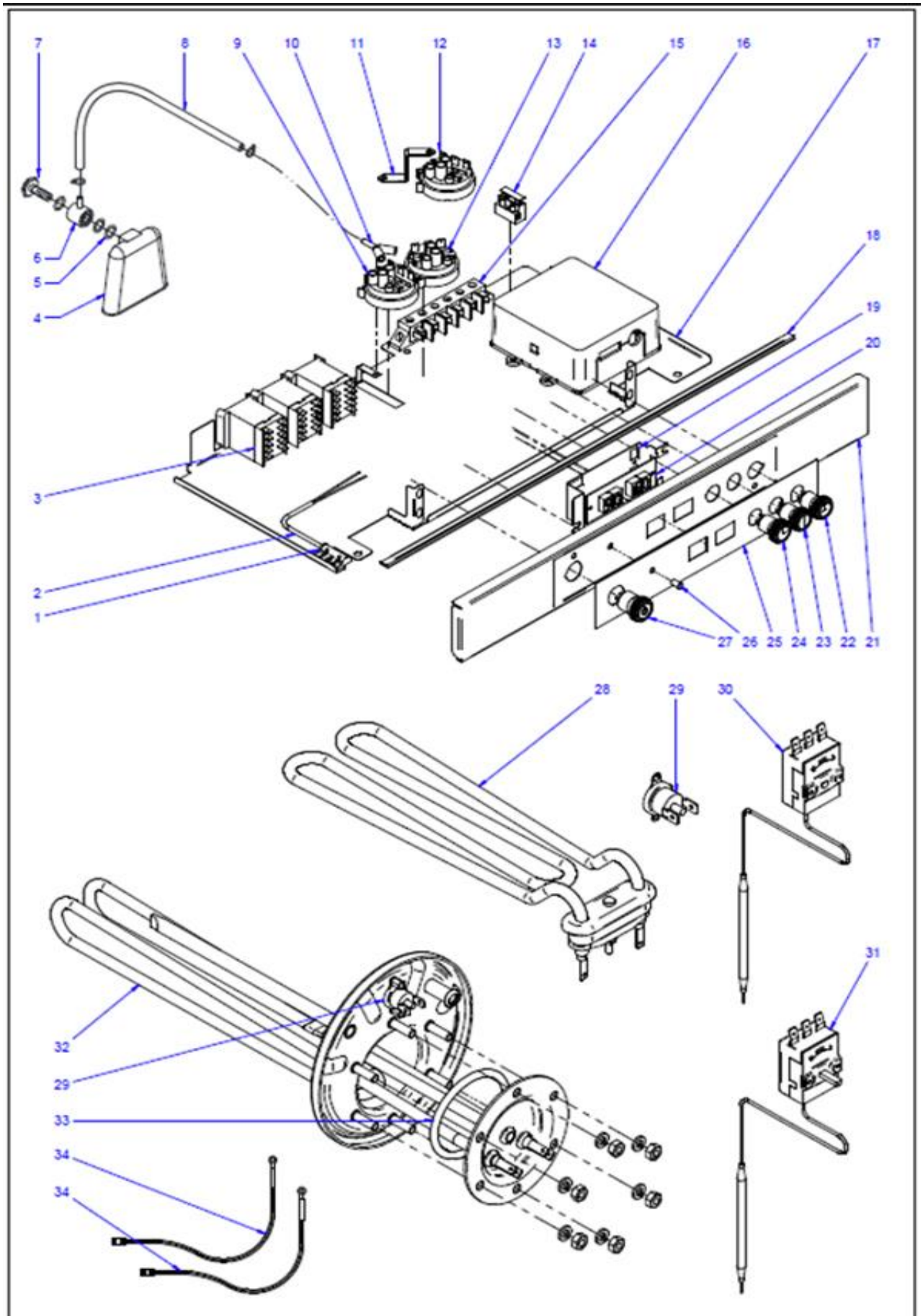

N.plano / Drawing N.	Firma / Signature	Fecha / Date	Aparato / Appliance	ARMAZON / FRAME	Lamina / Sheet
UC_11	Filip S.	01/2019		UC	1

ZONA / ZONE	PARTE FUNCIONAL ELECTRICA / ELECTRIC FUNCTIONAL PART	LÁMINA / DRAWING	UC_11

ITEM	REFERENCIA REFERENCE	DENOMINACIÓN	DENOMINATION	GT-OEM-500 (DD)	GT-OEM-500 B (DD)	GT-OEM-500 (DD) UK	GT-OEM-500 B (DD) UK	GT-OEM-500 W (DD)	GT-OEM-500 W B (DD)	GT-OEM-500 W (DD) UK	GT-OEM-500 W B (DD) UK	GT-OEM-500 SOFT (DD)	GT-OEM-500 SOFT B (DD)	GT-OEM-500 SOFT (DD) UK	GT-OEM-500 SOFT B (DD) UK	RECOMMENDED	ELIMINADO ELIMINATED	INTRODUCIDO INTRODUCED	NOTAS NOTES
1	12024066	AMARRE INTERRUP. MAGNETICO	MAGNETIC SWITCH FASTENER	1	1	1	1	1	1	1	1	1	1	1	1				
2	12024477	INTERRUPTOR MAGNETICO	MAGNETIC SWITCH	1	1	1	1	1	1	1	1	1	1	1	1				
3	12024011	CONTACTOR 230 V. 50-60 HZ 16A	CONTACTOR 230 V 50-60HZ 16A	3	3	3	3	3	3	3	3	3	3	3	3	X			
4	12024350	CAMARA PRESOSTATO	PRESSURE SWITCH	1	1	1	1	1	1	1	1	1	1	1	1		01/02/2022		
4	12261245	CAMARA PRESOSTATO v2	PRESSURE SWITCH CHAMBER v2	1	1	1	1	1	1	1	1	1	1	1	1			01/02/2022	
5	12009873	JUNTA TORICA 16.01X10.77X2.62	O-RING 16.01X10.77X2.62	1	1	1	1	1	1	1	1	1	1	1	1				
6	12024157	EMPALME PRESOSTATO	PRESSURE SWITCH CONNEX	1	1	1	1	1	1	1	1	1	1	1	1		01/02/2022		
6	12154278	O-ring 6x3 70NBR	O-ring 6x3 70NBR	1	1	1	1	1	1	1	1	1	1	1	1			01/02/2022	
7	12024222	TORNILLO PRESOSTATO	PRESSURE SWITCH BOLT	1	1	1	1	1	1	1	1	1	1	1	1		01/02/2022		
7	12270058	Special Nut M8 pressure	Special Nut M8 pressure	1	1	1	1	1	1	1	1	1	1	1	1			01/02/2022	
8	12153585	CONDUCTO PRESOSTATO	PRESOSTAT HOSE	1	1	1	1	1	1	1	1	1	1	1	1				
S/Nº	12023707	BRIDA ELASTICA TUBO	ELASTIC PIPE FLANGE	2	2	2	2	2	2	2	2	2	2	2	2				
9	12023805	PRESOSTATO SIMPLE 7,5-9,5bar	7,5-9,5bar SIMPLE PRESOSTAT	_	_	_	_	_	_	1	1	_	_	_	_	X			
10	12023510	RACORD EN Y	Y-CONNECTION	_	_	_	_	_	_	1	1	_	_	_	_				
11	12023163	SOPORTE PRESOSTATO	PRESSURE SWITCH SUPPORT	_	_	_	_	1	1	1	1	_	_	_	_				
12	12023802	PRESOSTATO SIMPLE 2-4 bar	2-4 bar SIMPLE PRESOSTAT	1	1	1	1	1	1	1	1	1	1	1	1	X			
13	12023804	PRESOSTATO SIMPLE 9,5-17 bar	9-17bar SIMPLE PRESOSTAT	_	_	_	_	1	1	1	1	_	_	_	_	X			
14	12024152	FUSIBLE 10A Ø5MM 20X5	FUSE 10A Ø5MM 20X5	1	1	1	1	1	1	1	1	1	1	1	1	X			
S/Nº	12045569	BORNAS PORTAFUSIB. 13A 2,5	FUSE HOLDER TERMINAL 13A	1	1	1	1	1	1	1	1	1	1	1	1				
15	12025183	REGLETA AUXILIAR 5 CONEXIONES	5 WAY ELECTRIC CONNECTOR	1	1	1	1	1	1	1	1	1	1	1	1				
16	12008750	CONTROL TARJETA 230V AC 50/60Hz	CARD CONTROL 230V AC 50/60	1	1	1	1	1	1	1	1	_	_	_	_	X	17.05.2019		
16	12188923	TARJETA CONTROL ELECTRÓNICA	ELECTRONIC CONTROL CARD	1	1	1	1	1	1	1	1	_	_	_	_	X		17.05.2019	8101717036
16	12188923	TARJETA CONTROL ELECTRÓNICA	ELECTRONIC CONTROL CARD	_	_	_	_	_	_	_	_	1	1	1	1				
17	12170235	BASE COMPONENTES ELÉCTRICOS	ELECTRIC COMPONENT BASE	1	1	1	1	1	1	1	1	1	1	1	1				
18	12183263	BURLETE SELLADO TAPA	UC-500 LID SEALING PROFILE	1	1	1	1	1	1	1	1	1	1	1	1				
19	12022219	SOPORTE DISPLAY	DISPLAY HOLDER	1	1	1	1	1	1	1	1	1	1	1	1				
20	12024028	DISPLAY TEMPERATURA	TEMPERATURE DISPLAY	1	1	1	1	1	1	1	1	1	1	1	1				
21	12184233	PANEL DE CONTROL GT-OEM-500	CONTROL PANEL GT-OEM-500	1	1	1	1	1	1	1	1	1	1	1	1				
22	12183262	PULSADOR CICLO LARGO	LONG CYCLE PUSH BUTTON	1	1	1	1	1	1	1	1	1	1	1	1	X			
23	12171806	PULSADOR CICLO MEDIO	MEDIUM CYCLE PUSH BUTTON	1	1	1	1	1	1	1	1	1	1	1	1	X			
24	12171805	PULSADOR CICLO CORTO	SHORT CYCLE PUSH BUTTON	1	1	1	1	1	1	1	1	1	1	1	1	X			
25	*	EMBELLECEDOR GT-OEM 500	GT-OEM-500 STICKER	1	1	1	1	1	1	1	1	1	1	1	1				Check Optionals
25	*	EMBELLECEDOR GT-OEM 500 SOFT	GT-OEM-500 SOFT STICKER	_	_	_	_	_	_	_	_	1	1	1	1	X			Check Optionals

ZONA / ZONE	PARTE FUNCIONAL ELECTRICA / ELECTRIC FUNCTIONAL PART	LÁMINA / DRAWING	UC_11

ITEM	REFERENCIA REFERENCE	DENOMINACIÓN	DENOMINATION	GT-OEM-500 (DD)	GT-OEM-500 B (DD)	GT-OEM-500 (DD) UK	GT-OEM-500 B (DD) UK	GT-OEM-500 W (DD)	GT-OEM-500 W B (DD)	GT-OEM-500 W (DD) UK	GT-OEM-500 W B (DD) UK	GT-OEM-500 SOFT (DD)	GT-OEM-500 SOFT B (DD)	GT-OEM-500 SOFT (DD) UK	GT-OEM-500 SOFT B (DD) UK	RECOMMENDED	ELIMINADO ELIMINATED	INTRODUCIDO INTRODUCED	NOTAS NOTES
26	12220785	LED VERDE 5V	5V GREEN LED LIGHT	_	_	_	_	_	_	_	_	1	1	1	1	X			
27	12171804	PULSADOR ON/OFF MÁQUINA	ON/OFF BUTTON	1	1	1	1	1	1	1	1	1	1	1	1	X			
28	12122629	RESISTENCIA CUBA 2.8 kW	TANK HEATER 2.8 kW	1	1	_	_	1	1	_	_	1	1	_	_	X			
28	12090524	RESISTENCIA CUBA 2 kW	TANK HEATER 2 kW	_	_	1	1	_	_	1	1	_	_	1	1	X			
29	12256229	TERMOSTATO LIMITADOR	SECURITY THERMOSTAT	2	2	2	2	2	2	2	2	2	2	2	2	X			
30	12161299	TERMOSTATO 60˚C	THERMOSTAT 60˚C	2	2	2	2	2	2	2	2	2	2	2	2	X			
31	12134992	TERMOSTATO 27-85˚C	THERMOSTAT 27-85˚C	1	1	1	1	1	1	1	1	1	1	1	1	X			
32	12098741	RESISTENCIA CALDERIN 2.8 Kw	BOILER HEATER 2.8 kW	1	1	_	_	1	1	_	_	1	1	_	_	X	01/05/2023		LJ320021
32	12098743	RESISTENCIA CALDERIN 2.2 Kw	BOILER HEATER 2.2 kW	_	_	1	1	_	_	1	1	_	_	1	1	X	01/05/2023		LJ320021
32	12291045	RESISTENCIA CALDERIN 2.8 Kw	BOILER HEATER 2.8 kW	1	1	_	_	1	1	_	_	1	1	_	_	X		01/05/2023	LJ320021
32	12291046	RESISTENCIA CALDERIN 2.2 Kw	BOILER HEATER 2.2 kW	_	_	1	1	_	_	1	1	_	_	1	1	X		01/05/2023	LJ320021
33	12010051	JUNTA TORICA 62,87x73,53x5,33	O-ring 62,87x73,53x5,33	1	1	1	1	1	1	1	1	1	1	1	1				
34	12025036	SONDA TEMPERATURA	TEMPERATURE PROBE	1	1	1	1	1	1	1	1	1	1	1	1				
S/Nº	12023142	AMARRE SONDA	PROBE HOLDER	2	2	2	2	2	2	2	2	2	2	2	2				

ZONA / ZONE	VARIOS / MISCELLANEOUS	LÁMINA / DRAWING	-

ITEM	REFERENCIA REFERENCE	DENOMINACIÓN	DENOMINATION	GT-OEM-500 (B)	GT-OEM-500 (B) DD	GT-OEM-500 (B) DD UK	GT-OEM-500 W (B)	GT-OEM-500 W (B) DD	GT-OEM-500 W (B) DD UK	GT-OEM-500 SOFT	GT-OEM-500 SOFT DD	GT-OEM-500 SOFT DD UK	GT-OEM-500 SOFT B	GT-OEM-500 SOFT B DD	GT-OEM-500 SOFT B DD UK	RECOMMENDED	ELIMINADO ELIMINATED	INTRODUCIDO INTRODUCED	NOTAS NOTES
	12218977	FOLLETO INSTRUC. GT-OEM	MANUAL INST. GT-OEM	1	1	1	1	1	1	1	1	1	1	1	1				
	12129067	ESQUEMA TEO. APERTURA TECH	THEOR. DIAGRAM TECH UNDER.	1	1	1	1	1	1	1	1	1	1	1	1				
	12132628	PLANO MONTAJE APERTURA TECH	TECH UNDERCOUNTER ASSEMBLY	1	1	1	1	1	1	1	1	1	1	1	1				
	12132526	CABLEADO TECH APERTURA	TECH UNDERCOUNTER WIRING	1	1	1	1	1	1	1	1	1	1	1	1				
	12130033	CABLEADO DOSIFICADOR DTGTE	WIRE FEEDER DETERGENT	_	_	_	_	1	1	1	1	1	1	1	1				
	12172084	CABLE CONEXIÓN BOTONES	BUTTONS CONNECTION WIRE	1	1	1	1	1	1	1	1	1	1	1	1				
	12165444	CABLE CONEXION SOFT	SOFT CONNECTION WIRE	_	_	_	_	_	_	1	1	1	1	1	1				
	12024184	CABLE EMPALME BOMBA DEAGÜE	DRAIN PUMP CONNECTION WIRE	_	_	_	_	_	_	_	_	_	1	1	1				
	12025112	CABLE DE ALIMENTACION UK	POWER WIRING UK	_	_	1	_	_	1	_	_	1	_	_	1				
	12023913	CABLE DE ALIMENTACION	POWER WIRING	1	1	_	1	1	_	1	1	_	1	1	_				
	12103338	LEYENDA APERTURA FRONTAL	LEGEND FRONT LOADING DW	1	1	1	1	1	1	1	1	1	1	1	1				

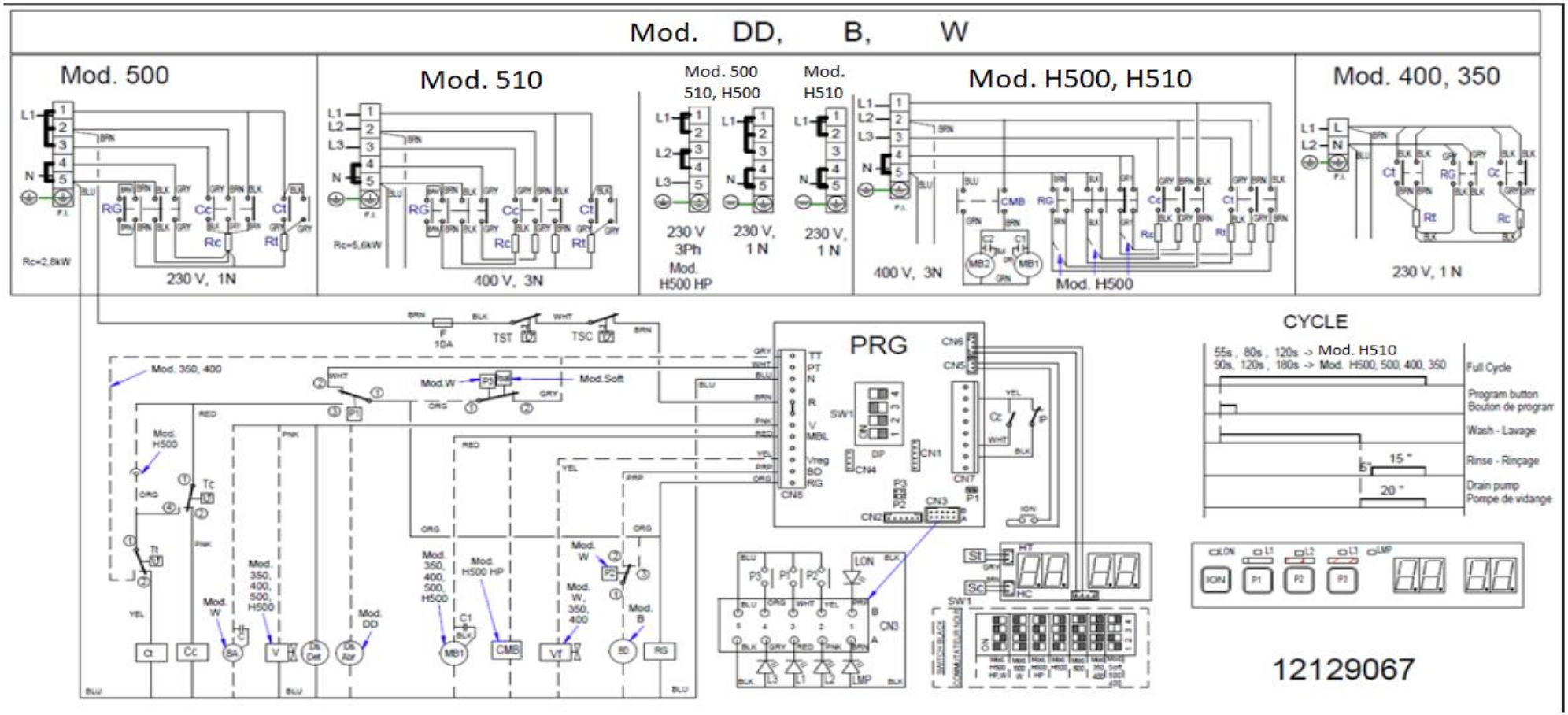
Mod. DD, B, W
Mod. 500
230 V, 1N
Mod. 510
400 V, 3N
Mod. 500 510, H500
230 V 3Ph
Mod. H500 HP
230 V, 1 N
Mod. H510
230 V, 1 N
Mod. H500, H510
400 V, 3N
Mod. H500
Mod. 400, 350
230 V, 1 N
PRG
CYCLE
55s , 80s , 120s -> Mod. H510
90s, 120s , 180s -> Mod. H500, 500, 400, 350
Full Cycle
Program button
Bouton de program
Wash - Lavage
Rinse - Rinçage
Drain pump
Pompe de vidange
12129067

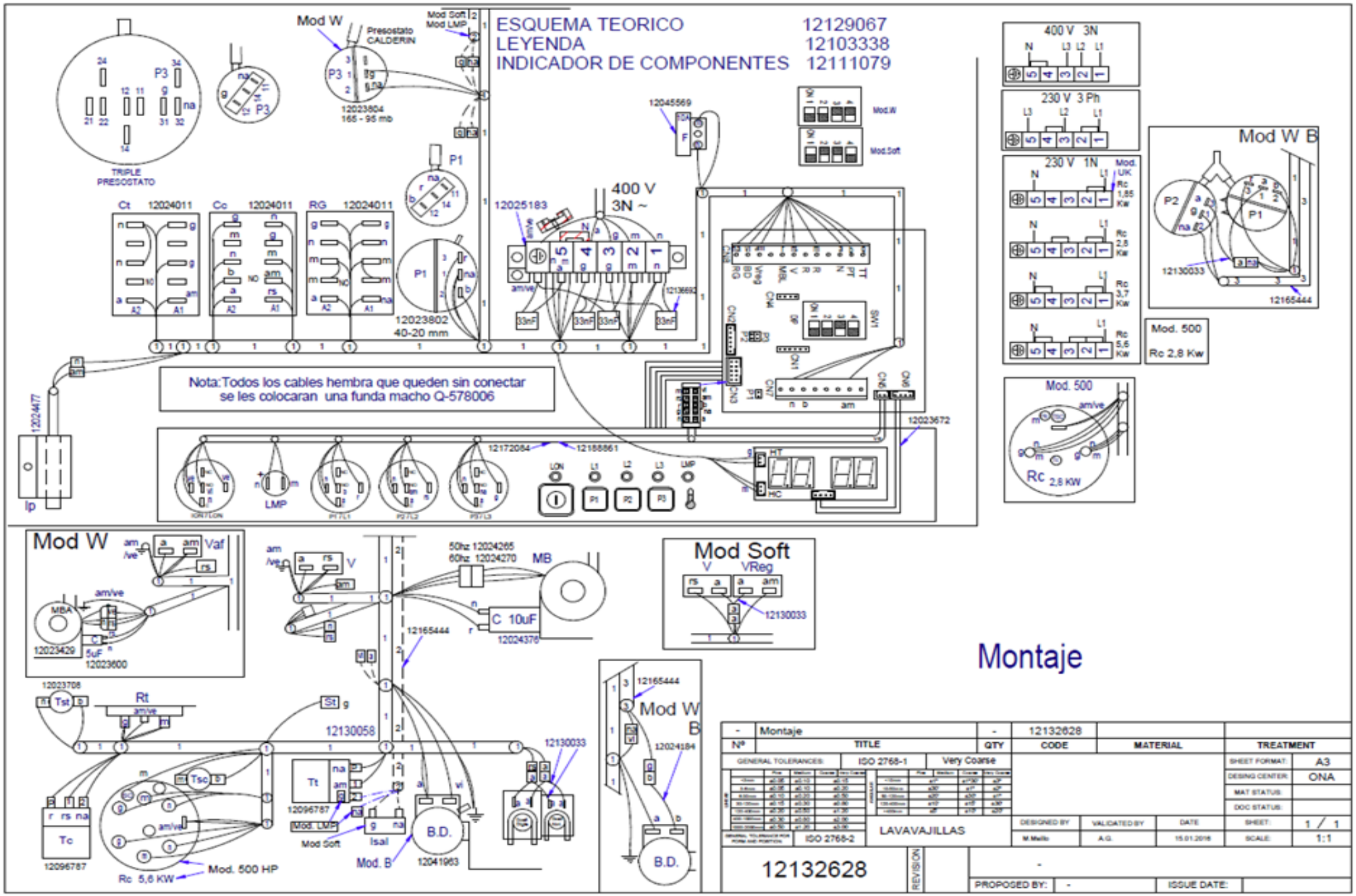
ESQUEMA TEORICO 12129067
LEYENDA 12103338
INDICADOR DE COMPONENTES 12111079
Mod W
Presostato CALDERIN
Mod Soft
Mod LMP
TRIPLE PRESOSTATO
12023804 165 - 95 mb
12023802 40-20 mm
400 V 3N ~
12045569
12025183
Ct 12024011
Cc 12024011
RG 12024011
Nota:Todos los cables hembra que queden sin conectar se les colocaran una funda macho Q-578006
12024477
12023672
12172084
12188861
400 V 3N
230 V 3 Ph
230 V 1N
Mod W B
12130033
12165444
Mod. 500
Rc 2,8 Kw
Mod. 500
Rc 2,8 KW
Mod W
Vaf
MBA
12023429
5uF
12023600
50hz 12024265
60hz 12024270
MB
C 10uF
12024376
Mod Soft
V
VReg
12130033
Montaje
12023708
Rt
12130058
12130033
12096787
Mod. LMP
Mod Soft
Isal
Mod. B
B.D.
12041963
Rc 5,6 KW
Mod. 500 HP
Mod W B
12024184
B.D.
Montaje
12132628
TITLE
QTY
CODE
MATERIAL
TREATMENT
GENERAL TOLERANCES:
ISO 2768-1
Very Coarse
ISO 2768-2
LAVAVAJILLAS
SHEET FORMAT: A3
DESING CENTER: ONA
MAT STATUS:
DOC STATUS:
SHEET: 1 / 1
SCALE: 1:1
DESIGNED BY
VALIDATED BY
DATE
M.Mello
A.G.
15.01.2018
12132628
REVISION
PROPOSED BY:
ISSUE DATE:

	ESPAÑOL	ENGLISH	FRANÇAIS	DUTSCH	ITALIANO	PORTUGUES
⏚	Tierra de protección	Grounding	Mise à terre	toma de tierra? Erdung	Messa a terra	
P	Puente de Conexión	Terminal block bridge	Pontage pour bloc de jonction	Verbindungsblockanschluss	Ponte di connessione	
BA	Bomba Aclarado	Rinse pump	Pompe de rinçage	Spülmittel dossierpumpe	Pompa di risciacquo	
BD	Bomba desagüe	Drain pump	Pompe de vidange	Abflubpumpe	Pompa scarico	
C, C1, C2	Condensador	Capacitor	Condensateur	kondensator	Condensatore	
CMB	Contactor bomba lavado	Wash pump contactor	Contacteur pompe de lavage	Türrelais	Contattore pompa lavaggio	
Cc	Contactor calentamiento calderin	Boiler heating contactor	Contacteur chauffage surchauffeur	Kontaktschütz Waschpumpe	Contattore riscaldamento boiler	
Ct	Contactor calentamiento tanque	Tank heating contactor	Contacteur chauffage cuve	Kontaktschütz Boilerheizung	Contattore riscaldamento serbatorio	
CP	Relé puerta	Door relay	Relais de porte	Kontaktschütz Heizung tank	Rele' porta	
Ds. Abr	Dosificador Abrillantador	Dispenser	Distributeur	Klarspülmittel dossierpumpe	Dosatore brillantante	
Ds. Det.	Dosificador Detergente	Detergent dispenser	Distributeur de détergent	Dosierer Spülmittel	Dosatore detergente	
F	Fusible	Fuse	Fusible	Fuse	Fusibile	
H1	Lampara encendido	Operation light	Voyant funcionement	Betriebsanzeigelampe	Spia accensione	
H2, H5	Lampara de marcha	Start light	Voyant demarrage	Startanzeigelampe	Spia avvio	
H3	Lampara maquina preparada	Light machine ready	Voyant machine prêt	Betriebsbereitschaftsanzeigelampe	Pilota macchina preparata	
H4	Lampara falta Sal	Lamp salt missing	Lampe absence sel	Lampe Mangel Salz	Spia sale mancante	
HRS	Sistema recuperador energia	Heat Recovery System	Système de récupération de chaleur	System für Hitze-Rückgewinnung	Sistema con recupero di calore	
IG	Interruptor general	Main switch	Interrupteur général	Hauptschalter	Interruttore generale	
IP	Micro puerta	Door microswitch	Micro porte	Mikroschalter Tür	Micro porta	
Ist	Pulsador marcha	push button start	bouton de démarrage	Schalter (Ein)	Pulsante Inizio	
L1 L2 L3	Fases Conexión Eléctrica	Power Supply Phases	Phases de alimentation	Stromanschlussfase	Fasi di alimentazione	
MB1, MB2	Bomba lavado	Wash Pump	Pompe de lavage	Waschpumpe	Pompa lavaggio	
M	Motor Programador lavado	Wash timer Motor	Programmeur Moteur lavage	Motor Programmiervorrichtung	Motore programmatore	
Mav.R	Motor Avance rapido Prg. Lav	Fast Forward Motor Prg. Wash	Moteur Avance rapide Prg. Lav	Motor Programmiervorrich.Betrieb	Motore programmatore avanzamento rapido	
M1, 2, 3, 4, 5	Micros Programador Lavado	Wash Programmer switch	laver micro-programmeur	Motor Programmiervorrich Spülen	Micro programmatore di lavaggio	
M20, 21, 22, 23	Programador Regeneracion	Regeneration Timer	Programmeur régénération	Regenerierungsprogramm	Timer di regenerazione	
P	Puente	Electric bridge	Pont électrique	Elektrischesteg	Ponte elettrico	
P1	Presostato Tanque	Tank Pressure switch	Pressostat de cuve	Tank Druckwächter	Pressostato serbatorio	
P2	Presostato Bomba desagüe	Drain pump Pressure switch	Pressostat de Pompe de vidange	Abflubpumpe Druckwächter	Pressostato pompa scarico	
P3	Presostato calderin	Boiler Pressure switch	Pressostat de surchauffeur	Boiler Druckwächter	Pressostato boiler	
PRG	Programador Electronico	Electric progammer	Programmateur électronique	Elektronischer Programmierer	Programmatore elettronico	
PRG P2	Puente Soft Start	Soft Start Jumper	Soft Start Cavalier	Soft Start Brücke	Ponte Soft Start	
Rc	Resistencia calderin	Boiler heating element	Resistance surchauffeur	Heizwiderstand Boiler	Resistenza boiler	
RG	Relé General	Main Relay	Relais principal	Stromversogungsanschluß Gener.	Rele' generale	
RST	Rele Marcha	Start up relay		Relais	Rele' inizio	
Rt	Resistencia tanque	Tank heating element	Resistance cuve	Heizwiderstand tank	Resistenza serbatorio	
SC	Sonda Temperatura Calderin	Boiler temperature sensor	Surchauffeur capteur de température	Temperatursensor Boiler	Boiler sonda temperatura	
ST	Sonda Temperatura tanque	Tank temperature sensor	Cuve capteur de température	Temperatursensor Tank	Serbatorio sonda temperatura	
TC	Termostato calderin	Boiler thermostat	Thermostat surchauffeur	Thermostat kessel	Termostato boiler	
Tmp	Temporizador	Timer	Minuteur	Timer	Timer	
TRF	Transformador	Transformer	Transformateur	Transformator	Transformatore	
TSC	Termostato Limitador calderin	Boiler Hi-limit thermostat	Thermostat Limiteur surchauffeur	Begrenzer Boiler	Limitatore boiler	
TST	Termostato Limitador tanque	Tank Hi-limit thermostat	Thermostat Limiteur de cuve	Begrenzer tank	Limitatore serbatorio	
TT	Termostato tanque	Tank thermostat	Thermostat de cuve	Thermostat tank	Temostato serbatorio	
V	Electroválvula llenado	Water solenoid valve	Electrovanne d'eau	Elektroventil Füllen und Spülen	Elettroval.riempimento e risciacquo	
Vf	Electroválvula agua Fria	Water solenoid valve	Electrovanne d'eau	Elektroventil Füllen und Spülen	Elettroval.riempimento e risciacquo	
VR1, VR2,VR3,BR	Electrovalvulas Regeneracion	Regeneration solenoid valve	vanne de régénération	Regenerierventil	Valvola di rigenerazione	
	COLOR	***COLOUR***	***COULEURS***	***FARBEN***	***COLORE***	
a = BLU	Azul	Blue	Bleu	Blau	Blu	
am = YEL	Amarillo	Yellow	Jaune	Gelb	Giallo	
am/ve = YEL/GRN	Amarillo/Verde	Yellow / green	Jaune / vert	Gelb/ grün	Giallo/ verde	
b = WHT	Blanco	White	Blanc	WeiB	Bianco	
g = GRY	Gris	Grey	Gris	Grau	Grigio	
m = BRN	Marron	Brown	Marron	Braun	Marrone	
n = BLK	Negro	Black	Noir	Schwarz	Nero	
na = ORG	Naranja	Orange	Orange	Orange	Arancio	
r = RED	Rojo	Red	Rouge	Rot	Rosso	
rs = PNK	Rosa	Pink	Rose	Rosa	Rosa	
ve = GRN	Verde	Green	Vert	Grün	Verde	
vi = PRP	Violeta	Purple	Pourpre	Violett	Viola	
			12103338			**12103338**