Manitowoc

Foodservice

Parts Manual

For more Parts Information:
https://manitowocfsg.sysonline.com/Default.aspx

TABLE OF CONTENTS

Manitowoc Foodservice [Updated: Sep. 30, 2013]
Manitowoc - Ice & Related
Parts Catalog
Ice Machine
RNS Series
RNS Model - Air
RNS1000
RNS1000 Evaporator Assembly 1
RNS1000 Evaporator Compartment 3
RNS1000 Panels 6

RNS1000 EVAPORATOR ASSEMBLY

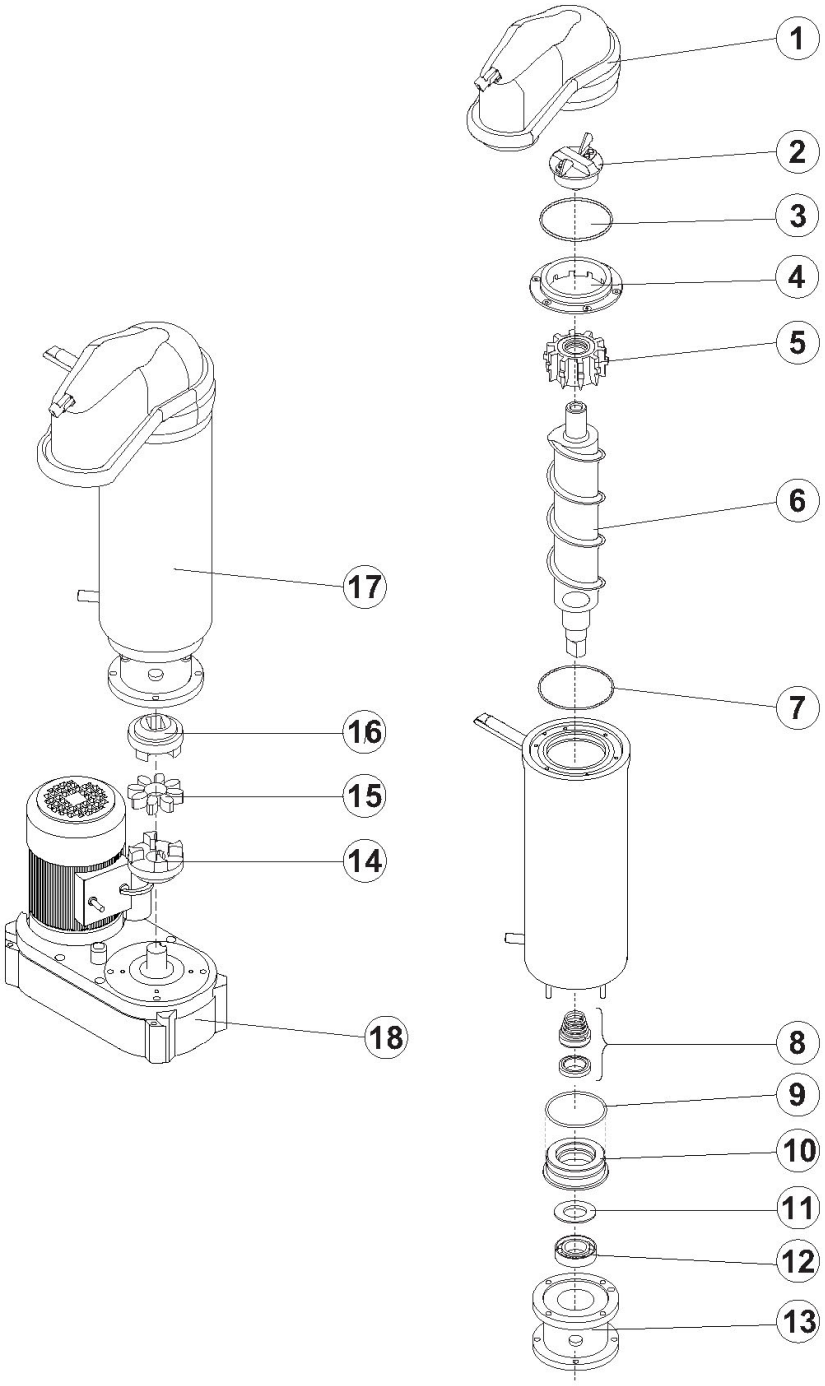

RNS1000 EVAPORATOR ASSEMBLY

#	PART #	DESCRIPTION	QTY	Note
1	000011927	Ice Exhaust with Microswitch		
2	000012891	Ice Breaker		
3	000011912	Extruder Flange - O-ring		
4	000011928	Extruder Flange		
5	000011929	Extruder with Bearings Assembly		
6	000011930	Auger		
7	000008935	Upper O-ring		
8	000005779	Water Seal		
9	000005582	Lower O-Ring		
10	000011931	Water Seal Retainer		
11	000011933	Nilos Ring		
12	000011932	Bearing		
13	000005694	Evaporator Foundation		
14	000005643	Flex Jaw Coupling Lower		
15	000005644	Flex Jaw Coupling Spider		
16	000005571	Flex Jaw Coupling Upper		
17	000012917	EvaporatorAssembly		
18		Gearmotor Assembly		
18a	000006064	Gearmotor Assembly - 220V/60 Hz/1 Ph		
18b	000005699	Gearmotor Assembly - 230V/50 Hz/1 Ph		
19		Gearmotor Capacitor		
19a	000007825	Gearmotor Capacitor - 115V/60 Hz/1 Ph		
19b	000007822	Gearmotor Capacitor - 230V/50 Hz/1 Ph		
20	000011883	Rotation Sensor		
21	000005649	Cutter Head		
22	000012503	Flex Jaw Coupling Assembly		

RNS1000 EVAPORATOR COMPARTMENT

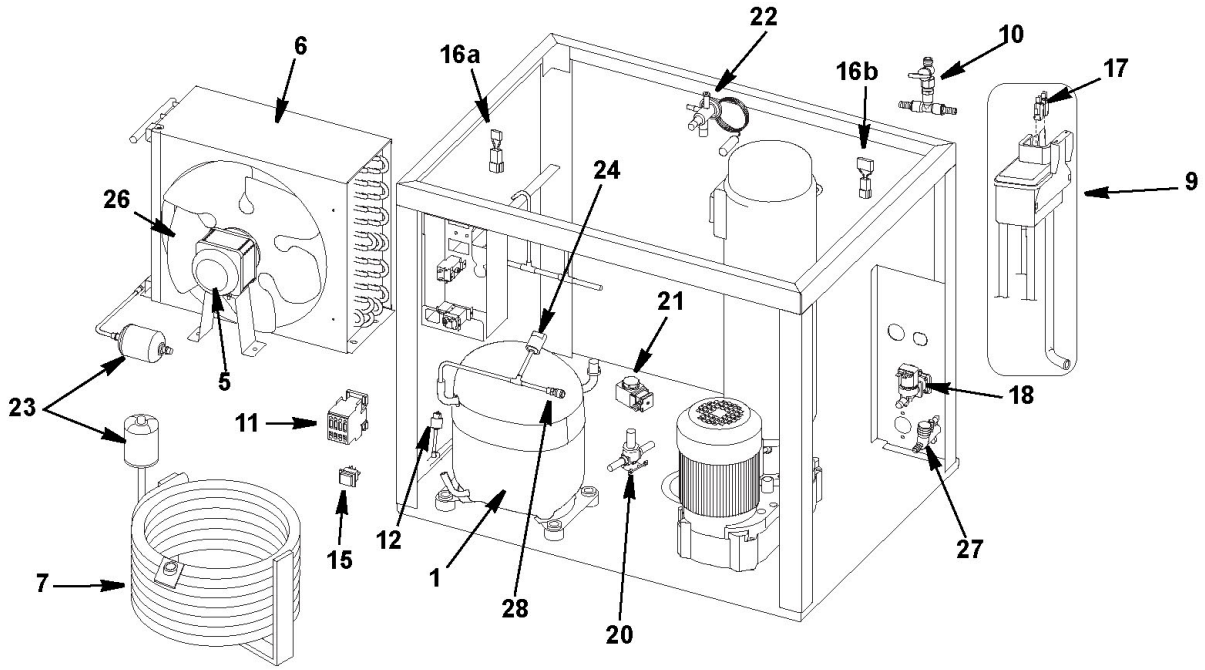

RNS1000 EVAPORATOR COMPARTMENT

#	PART #	DESCRIPTION	QTY	Note
1		Compressors		
1a	000009250	Compressor - 208-230V/60 Hz/1 Ph		
1b	000009254	Compressor - 230V/50 Hz/1 Ph		
1c	000010018	Compressor - 460V/50 Hz/3 Ph		
2		Internal Relay		
2a	000010801	Internal Relay - 230V/60 Hz/1 Ph		
2b	000010802	Internal Relay - 230V/50 Hz/1 Ph		
3		Run Capacitor		
3a	000010810	Run Capacitor - 230V/60 Hz/1 Ph		
3b	000010811	Run Capacitor - 230V/50 Hz/1 Ph		
4		Start Capacitor		
4a	000010816	Start Capacitor - 230V/60 Hz/1 Ph		
4b	000010817	Start Capacitor - 230V/50 Hz/1 Ph		
5		Fan Motor		
5a	000005579	Fan Motor - 208-230V/50-60 Hz/1 Ph		
5d	000012281	Bracket - Fan Motor		
6	000005633	Air Condenser		
7	000008299	Water-cooled Condenser		
8	000008269	Bulkhead Fitting 2.75"		
9	000012451	Water Reservoir Assembly		[1]
9a	000012282	Water Reservoir Only		
10	000008552	Evaporator Drain Tap		
11		Compressor Contactor		
11a	000008462	Compressor Contactor - 208-230V/60 Hz/1-3 Ph		
11b	000005641	Compressor Contactor - 230V/50 Hz/1 Ph		
12	000006076	Low Pressure Safety Switch		
13	000011623	Bin Thermostat		
14		Fan Cycle Control - See Note for Usage		
14a	000006060	Fan Cycle Control - 115-230V/50-60 Hz/1 Ph		[2]
14b	000006191	Fan Cycle Control - 208-230V/50-60 Hz/1 Ph		[3]
15	000005763	ON/OFF Rocker Switch		
16		Electronic Noise Reducer - See Note for Usage		
16a	000005680	Electronic Noise Reducer		[4]
16b	000005678	Electronic Noise Reducer		[5]
17	000005760	Float Microswitch (each)		
18		Water Inlet Valve - Ice Making		
18a	000006058	Water Inlet Valve - 220V/60 Hz/1 Ph		
18b	000005770	Water Inlet Valve - 220-230V/50-60 Hz/1 Ph		
19		Water Inlet Valve - Additional for Water-cooled Condensers		
19a	000006050	Water Inlet Valve Water-cooled Condenser - 208-230V/60 Hz/1 Ph		
19b	000005639	Water Inlet Valve Water-cooled Condenser - 230V/50 Hz/1 Ph		
20	000006245	Valve Body		

RNS1000 EVAPORATOR COMPARTMENT

#	PART #	DESCRIPTION	QTY	Note
21		Harvest Valve Coil		
21a	000008763	Valve Coil - 60 Hz		
21b	000006246	Valve Coil - 50 Hz		
22		Expansion Valve		
22a	000009249	Expansion Valve - 60 Hz		
22b	000009253	Expansion Valve - 50 Hz		
23	000005675	Drier		
24	000008557	High Pressure Safety Switch		
25	000009039	Suction Line Assembly		
26		Condenser Fan Blade		
26a	000005689	Condenser Fan Blade - 208-230V/60 Hz/1 Ph		
26b	000005573	Condenser Fan Blade - Water-cooled		
27		Drain Manifold		
27a	000006161	Drain Manifold - 115-230V/60 Hz/1 Ph		
27b	000008300	Drain Manifold - 208-230V/60 Hz/1 Ph		
27c	000005673	Drain Manifold - 230V/50 Hz/1 Ph		
27d	000008630	Drain Manifold - 230-415V/50 Hz/1 Ph		
28		Access Valve		
28a	000006408	Fitting - Access Valve		
28b	000006409	Core - Access Valve		
28c	000006410	Cap - Access Valve		
29	000005754	Reservoir Bracket		
30	000009971	Backflow Preventer 60 Hz - 3/8"		
31	000009972	Backflow Preventer 50 Hz - 3/4"		

PART NOTES:

[1] - Includes Reservoir, Hoses, Clamps, Drain Tap & Two Microswitches
[2] - 60 Hz
[3] - 50 Hz
[4] - Air-cooled
[5] - Water-cooled

RNS1000 PANELS

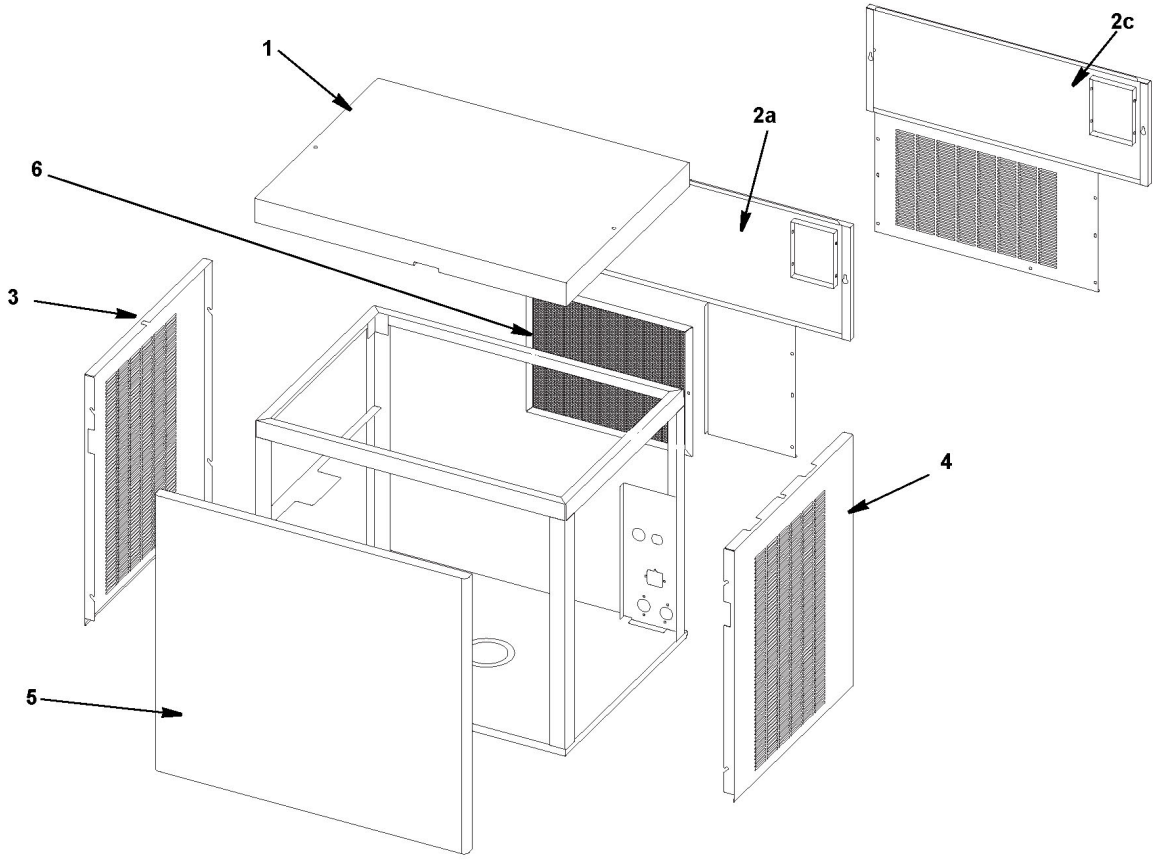

RNS1000 PANELS

#	PART #	DESCRIPTION	QTY	Note
1	000009245	Top Panel		
2		Back Panels - See Notes for Usage		
2a	000009246	Back Panel - 208-230V/60 Hz/1 Ph		[1]
2b	000009252	Back Panel Air-cooled - 230V/50 Hz/1 Ph		
2c	000009986	Back Panel Water-cooled 230/60/1		
2d	000010019	Back Panel Water-cooled - 230V/50 Hz/1 Ph		
3	000008766	Left Side Panel		
4	000008757	Right Side Panel		
5	000009248	Front Panel Assembly		
6	000009247	Air Filter		

PART NOTES:

[1] - Air-cooled