Manitowoc

Foodservice

Parts Manual

For more Parts Information:
https://manitowocfsg.sysonline.com/Default.aspx

TABLE OF CONTENTS

Manitowoc Foodservice [Updated: Sep. 30, 2013]
Manitowoc - Ice & Related
Parts Catalog
Ice Machine
RNS Series
RNS Model - Air
RNS0300
RNS0300 Evaporator Assembly 1
RNS0300 Evaporator Compartment 3
RNS0300 Panels 6

RNS0300 EVAPORATOR ASSEMBLY

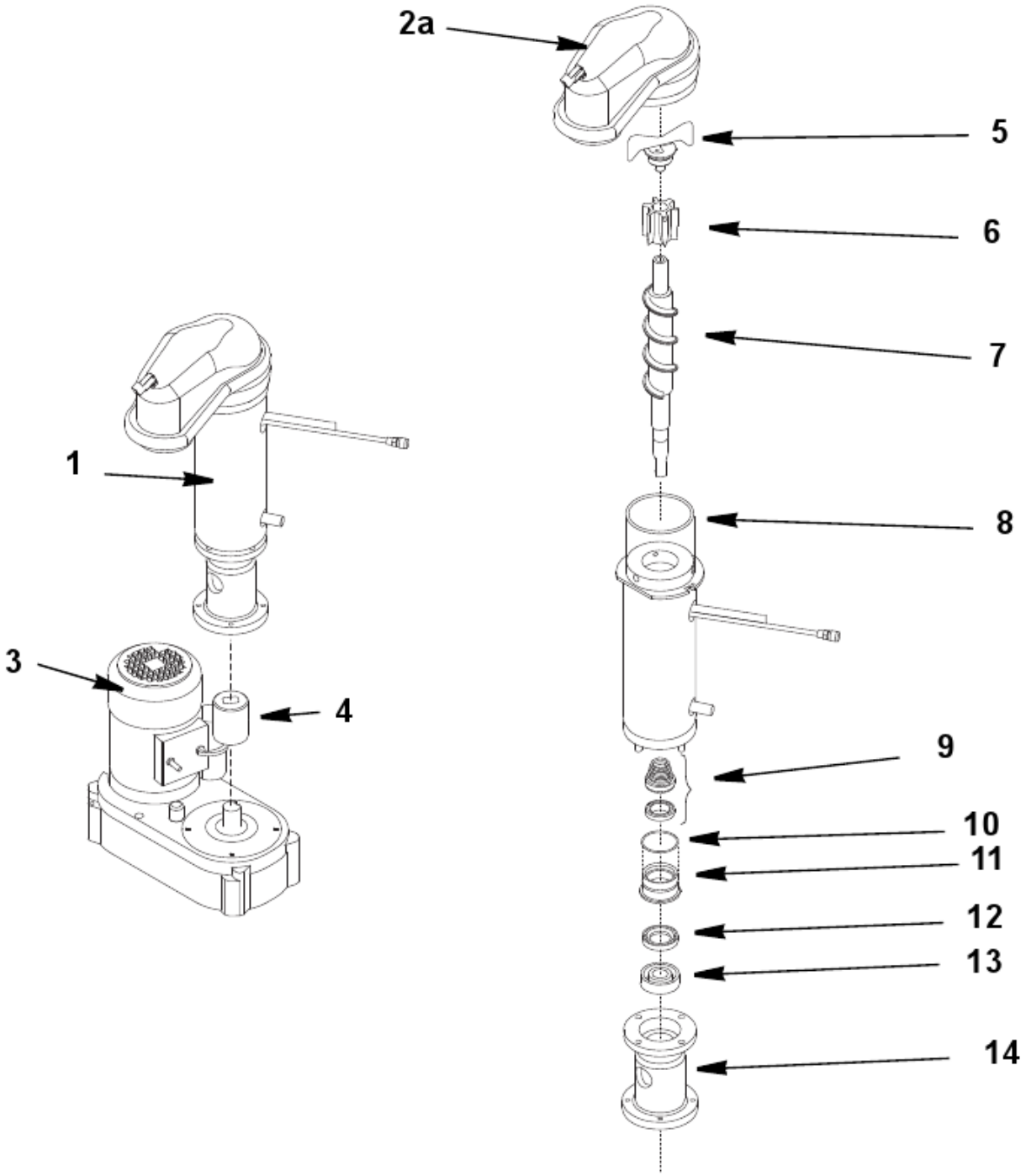

RNS0300 EVAPORATOR ASSEMBLY

#	PART #	DESCRIPTION	QTY	Note
1	000012319	Evaporator Assembly		
2	000011622	Ice Chute with Bulb Holder		
2a	000012452	Ice Exhaust with Microswitch		
3		Gear Motor Assembly		
3a	000011126	Gearmotor Assembly - 115V/60 Hz/1 Ph		
3b	000011800	Gearmotor Assembly - 208-230V/50-60 Hz/1 Ph		
4	000008967	Joint		
5	000010271	Ice Breaker		
6	000009156	Extruder with Bearings Assembly		
7	000009157	Auger		
8	000008900	O-ring Gasket		
9	000006426	Water Seal		
10	000005583	O-ring Gasket		
11	000005782	Water Seal Retainer		
12	000008938	Seal Ring		
13	000008898	Bearing		
14	000005693	Evaporator Foundation		
14a	000012459	Bolt - Evaporator Foundation - M6 x 25mm		

RNS0300 EVAPORATOR COMPARTMENT

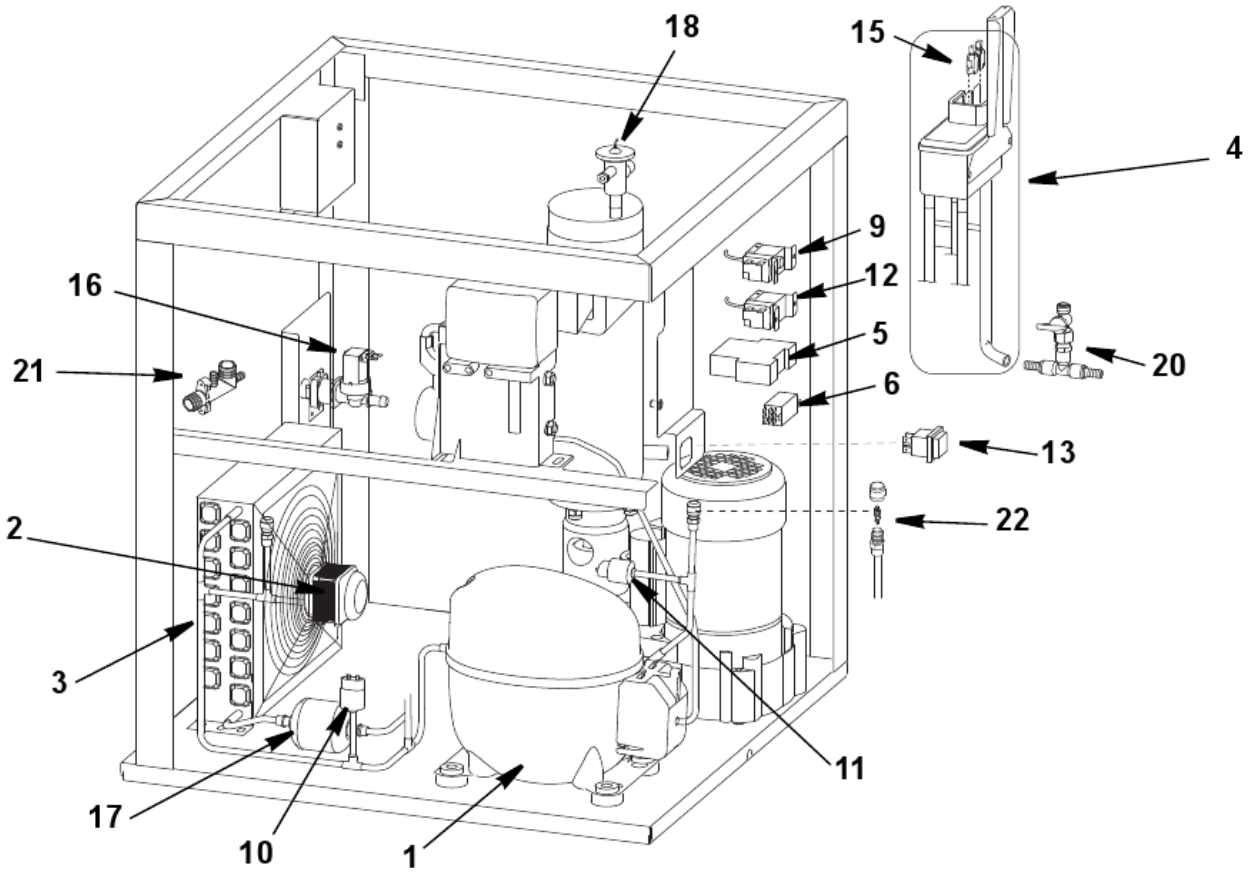

RNS0300 EVAPORATOR COMPARTMENT

#	PART #	DESCRIPTION	QTY	Note
1		Compressor		
1a	000008833	Compressor - 115V/60 Hz/1 Ph		
1c	000005627	Compressor - 208-230V/50-60 Hz/1 Ph		
2		Condenser Fan		
2a	000008835	Condenser Fan Motor - 115V/60 Hz/1 Ph		
2b	000009256	Condenser Fan Motor - 208-230V/50-60 Hz/1 Ph		
2c	000005686	Condenser Fan Blade		
3	000005632	Air Condenser		
4	000012451	Water Reservoir Assembly		[1]
5	000012012	Electronic Compressor Delay Timer		
6		Compressor Delay Relay		
6a	000005746	Compressor Delay Relay - 115V/60 Hz/1 Ph		
7		Start Capacitor		
7a	000010812	Start Capacitor - 115V/60 Hz/1 Ph		
8	000010803	Overload - 115V/60 Hz/1 Ph		
9	000011623	Bin Thermostat		
9	000005765	Bin Thermostat		[2]
10	000008557	High Pressure Safety Switch		
11	000006076	Low Pressure Safety Switch		
12		Fan Cycle Control - See Note for Usage		
12a	000006060	Fan Cycle Control - 115-230V/50-60 Hz/1 Ph		[3]
12b	000006191	Fan Cycle Control - 208-230V/50-60 Hz/1 Ph		[4]
13	000005763	ON/OFF Rocker Switch		
14		Electronic Noise Reducer		
14a	000005678	Electronic Noise Reducer		
15	000005760	Float Microswitch (each)		
16		Water Inlet Valve - See Note for Usage		
16a	000006063	Water Inlet Valve - 115V/60 Hz/1 Ph		
16b	000005770	Water Inlet Valve - 220-230V/50-60 Hz/1 Ph		[5]
16c	000005770	Water Inlet Valve - 220-230V/50-60 Hz/1 Ph		[6]
17	000005676	Drier		
18	000010551	Expansion Valve		
19		Backflow Preventer		
19a	000009971	Backflow Preventer 60 Hz - 3/8"		
19b	000009972	Backflow Preventer 50 Hz - 3/4"		
20		Evaporator Drain Tap - See Note for Serial Break		
20a	000008552	Evaporator Drain Tap		[7]
20b	000009160	Evaporator Drain Tap		[8]
21		Drain Manifold - See Note for Usage		
21a	000006161	Drain Manifold - 115-230V/60 Hz/1 Ph		[3]
21b	000005673	Drain Manifold - 230V/50 Hz/1 Ph		[9]
21c	000008630	Drain Manifold - 230-415V/50 Hz/1 Ph		[10]

RNS0300 EVAPORATOR COMPARTMENT

#	PART #	DESCRIPTION	QTY	Note
22		Access Valve		
22a	000006408	Fitting - Access Valve		
22b	000006409	Core - Access Valve		
22c	000006410	Cap - Access Valve		
23		Screws		
23a	000009040	Screw - M5 x 10TC		[11]
23b	000009041	Screw - 3.9 x 13TC		[11]

PART NOTES:

[1]	-	Includes Reservoir, Hoses, Clamps, Drain Tap & Two Microswitches
[2]	-	Discontinued
[3]	-	115V
[4]	-	208-230V
[5]	-	220V/60 Hz/1 Ph
[6]	-	230V/50 Hz/1 Ph
[7]	-	Before Serial Number 533269
[8]	-	After Serial Number 533269
[9]	-	230V Air-cooled
[10]	-	230V-415V Water-cooled
[11]	-	No Longer Available

RNS0300 PANELS

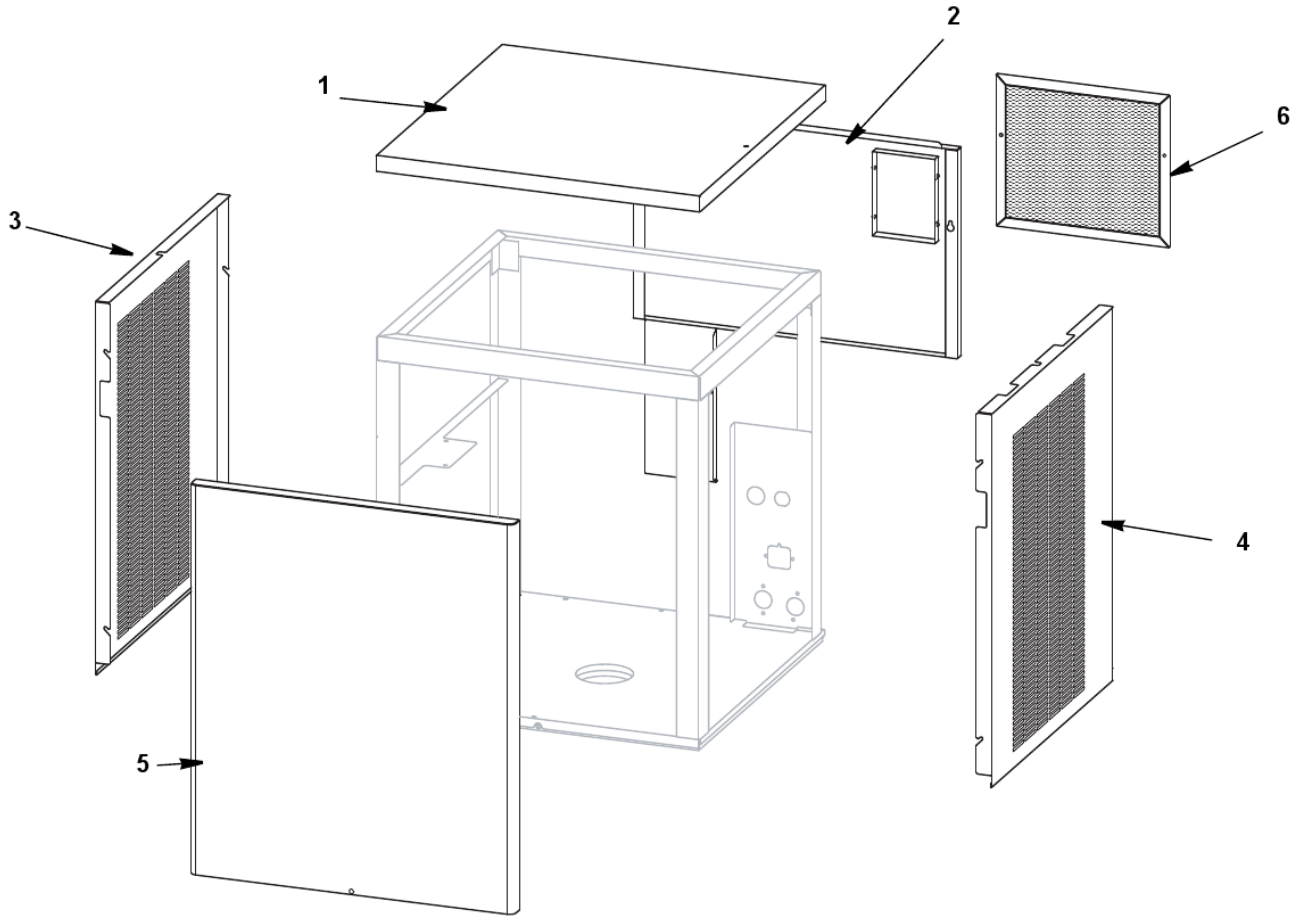

RNS0300 PANELS

#	PART #	DESCRIPTION	QTY	Note
1	000008759	Top Panel		
2		Back Panels - See Note for Usage		
2a	000008836	Back Panel - Air-cooled or Water-cooled		[1]
2b	000009255	Back Panel - Air-cooled		[2]
2c	000009104	Back Panel - Water-cooled		[2]
3	000008768	Left Side Panel		
4	000008757	Right Side Panel		
5	000008755	Front Panel Assembly		
6	000008837	Air Filter		
17	000011923	Cartoning		

PART NOTES:

[1] - 60 Hz
[2] - 50 Hz