DATA SHEET

Sirman Digigrill L Cast Iron Double Head Sandwich Grill with Smooth Bottom | Top

34D3441102SI

Build

- Powerful and robust Double Head design that fits on any countertop.
- Cooking surface of 500x255mm, equipped with double smooth top and bottom cast iron grilling plates.
- Constructed entirely from full stainless steel and high-quality materials, ensuring longevity and easy cleaning.
- Solid cast iron grilling plates are enhanced with specialized ceramic integration, providing sturdiness and non-stick, scratch-resistant grilling surfaces.
- Superior thermal conductivity promotes even heating and significantly reduces cooking times, allowing for optimal thermal efficiency and minimal heat loss.
- Easy to clean due to the natural non-stick properties of the grilling plates.
- Acid and salt proof with resistance to oxidation, promoting the highest hygiene standards.
- Featuring precise digital controls for each of the four quadrants, this unit allows for customizable temperature settings in 5°C increments, up to a maximum of 300°C. Each quadrant operates independently, enabling you to use the heating plates separately for enhanced versatility. Perfect for a variety of cooking methods, from low-heat warming to high-heat searing, this feature ensures optimal results and efficient energy usage across diverse culinary tasks.
- Equipped with a built-in digital timer, this unit features a clear countdown display for precise time management. Once the set time has elapsed, an audible buzzer alerts the operator, ensuring products are cooked to perfection without constant monitoring. Ideal for busy kitchens, this function enhances workflow efficiency and helps maintain consistent cooking results.
- Shock-proof heating elements are integrated with the plates, enhancing thermal conductivity and overall performance.
- Adjustable upper plates for customizable cooking and pressing height.
- Self-balancing upper grilling plate mechanism ensures consistent contact with food for even cooking
  Mechanical timer enables accurate cooking time settings, helping to prevent overcooking.

Technical specifications

External Size

External Width	530mm
External Depth	389mm
External Height	185mm

Weight

Net weight	29 kg
package weight	32 kg

Technical Features

Plate size	500x255mm

Connection requirements electric

Electrical connected loads	3000W
Voltage	240 1N/50Hz
Plug Supplied	Yes

Warranty

2 Year Warranty	2 years parts and labour
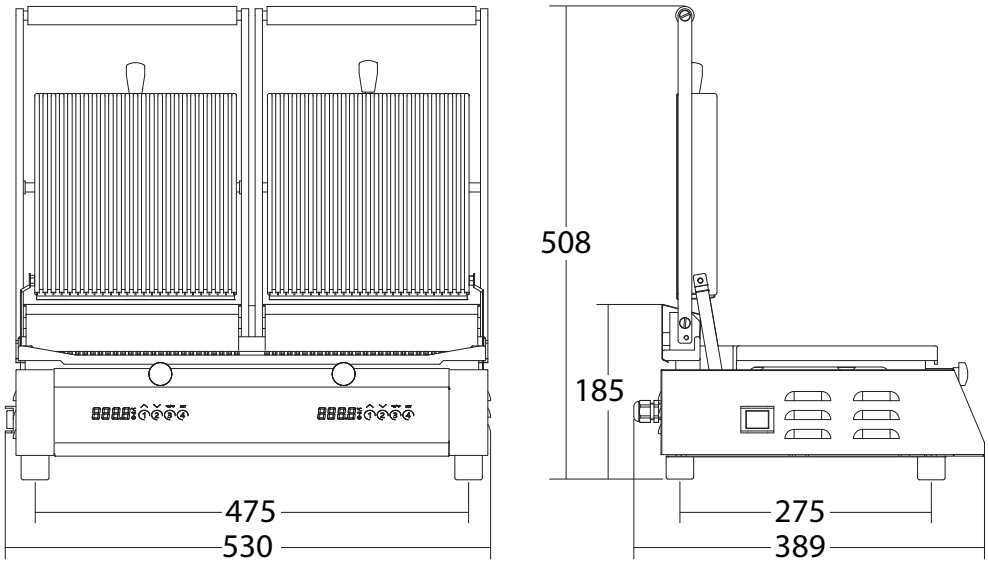
**Subject to a prevanttitive maintence plan*