DATA SHEET

Lotus F13T-74ET Electric 13L Single Tank Benchtop Fryer

18090430 70-SERIES

ITALIAN CULINARY ART

Build

- Professional electric single tank benchtop fryer with 13L capacity
- Heavy-duty construction made from premium CrNi 18/10 AISI 304 stainless steel with Scotch-Brite satin finish. Featuring a 2mm thick worktop, rounded edges, chrome details, rear splash-back and exhaust Flue
- Waterproof chromed knobs with an IPX5 waterproof rating.
- High-efficiency rapid recovery sheathed elements effortlessly heat oil with minimal heat loss. Precise thermostats controls ensure accurate and perfected cooking results.
- Easy Tank Cleaning utilizes a specially designed rotating heating element, creating clear space for effective sanitizing and ensuring all areas of the tank are thoroughly cleaned.
- Front oil drain designed for easy and safe oil drainage from each tank.
- Include a frying basket with single front grip, measuring 28 cm W x 29 cm D x 10 cm H, along with a drip tray with sieve.
- Fully insulated Stainless Steel frying tank measuring 30.5 cm W x 34 cm D x 22.5 cm H
- Designed for easy maintenance and serviceability, with all parts accessible by simply removing the front control panel.



View 3D

Options

Basket

☐	Half Basket	
	Model: 1/2 F13	SKU: 531013200



Technical specifications

External Size

External Width	400mm
External Depth	705mm
External Height	280mm

Weight

Net weight	
package weight	48 kg

Technical Features

Element Power	10.95 kW
Tank Type	Single
Frying Basket Size	28 x 29 x 10cm
Frying Tank Size	30.5 x 34 x 22.5cm
Frying Tank Capacity	13L
Production	10kg/h

Connection requirements electric

Electrical connected loads	10.95 kw
Voltage	400V~3N
Plug Supplied	No

Warranty

2 Year Warranty	2 years parts and labour

**Subject to a prevanttitive maintence plan*

DATA SHEET

Lotus F13T-74ET Electric 13L Single Tank Benchtop Fryer

18090430 70-SERIES

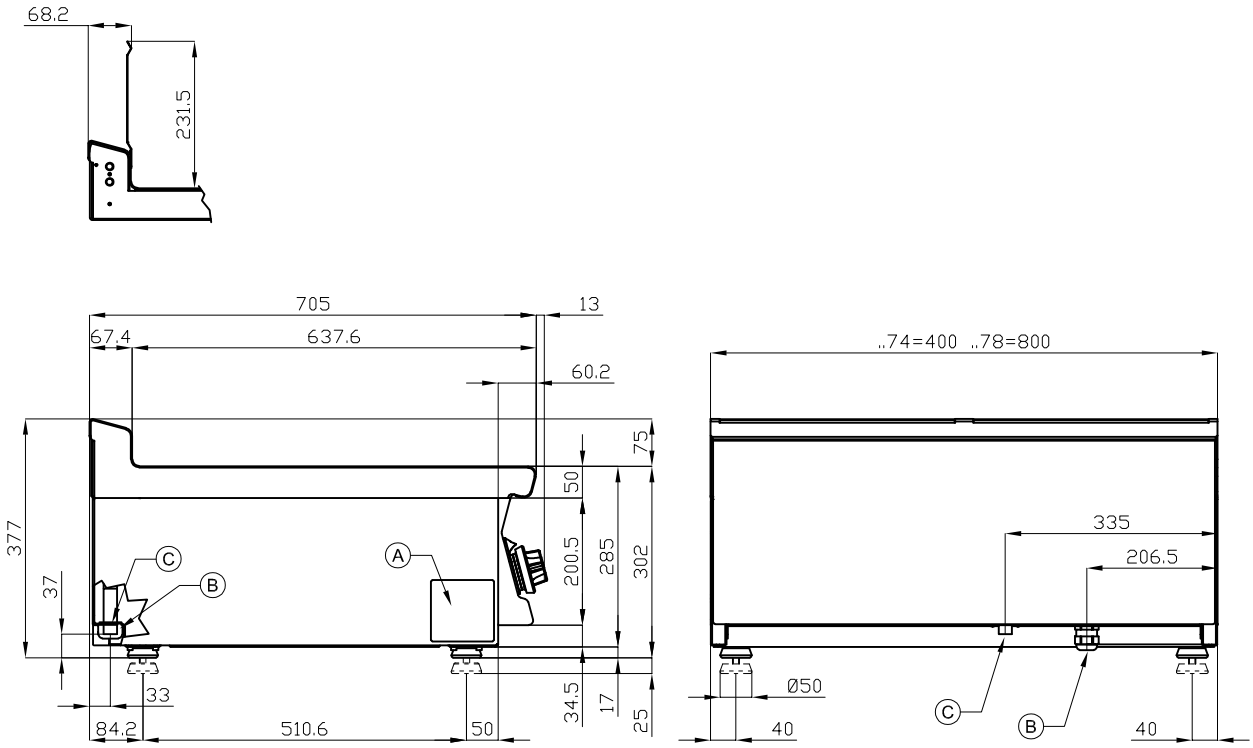

A	Data plate
B	Electrical connection

We reserve the right to alter specifications without notice.