DATA SHEET

Lotus CF6-712GPV 6 Burner Gas Range with Oven

08681251 70-SERIES

☐ LPG ☐ NAT

ITALIAN CULINARY ART

View 3D

Build

- Heavy-duty construction made from premium CrNi 18/10 AISI 304 stainless steel with Scotch-Brite satin finish. It features a 2mm thick worktop, rounded edges, chrome details, and a rear splashback.
- Waterproof chromed knobs with an IPX5 waterproof rating.
- Burners with pilot light ignition and thermocouple safety valve. Flame failure as standard.
- Powerful 6 x 27 Mj/hr large modulating burners with variable flame control.
- Heavy guage cast iron plated burner body and caps for durability and longevity. This unique design also incorporates a pilot protection which reduces the likelihood of any blocking.
- Trivets are constructed from heavy-gauge stainless steel rods with coverage over two burners to ensure easy pan movement, durability, and hygiene.
- Removable liquid and grease collectors under the burners ensure easy cleaning.
- Oven with Piezoelectric ignition, offering temperature control between 150°C and 300°C, and equipped with thermocouple safety valves.
- The oven accommodates 4 x 2/1 GN racks and includes one heavy-duty stainless steel 2/1 GN rack (67cm x 55cm) as standard.
- Powerful 27 MJ/hr bottom oven with heavy-gauge, thick stainless steel flame spreaders for even heat distribution.
- Oven racks include a quick disconnect fitting, allowing all the oven racks to be removed in seconds for a deep clean.
- The oven chamber is constructed from heavy-gauge AISI 304 stainless steel with rounded corners for ease of cleaning and hygiene.
- Heavy gauge fully insulated stainless steel drop down door with reinforced hinges and springs.
- The oven is designed for easy maintenance and service-ability, with all parts accessible by simply removing the liquid collectors to reach the burners and pilots, as well as the front control panel.

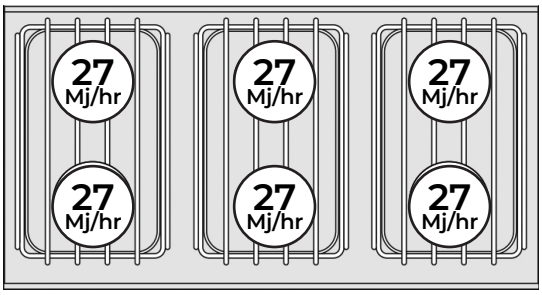

Technical specifications

External Size

External Width	1200mm
External Depth	705mm
External Height	900mm

Weight

Net weight	
Package weight	178kg

Technical Features

Burner[s] Power	6 x 27 Mj/hr
Oven Power	27 Mj/hr
Oven Temp	150°C - 300°C
Oven Capacity	4 x 2/1 (650 x 530)
Pilots	Yes
Flame Failure	Yes

Connection requirements Gas

Gas Consumption	189 Mj/hr
Gas Connection	3/4" M GAS

Warranty

2 Year Warranty	2 years parts and labour

**Subject to a prevanttitive maintence plan*

Options

☐

Set of 4 wheels Ø 100x30, 2 with brake	
Model: SR-100	SKU: 50900001

☐

Smooth griddle plate 2 burners for grid rod	
Model: PLFT/72	SKU: 08590471

☐

Grooved griddle plate 2 burners for grid rod	
Model: PRFT/72	SKU: 08590473

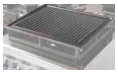

DATA SHEET

Lotus CF6-712GPV 6 Burner Gas Range with Oven

08681251 70-SERIES

☐ LPG ☐ NAT

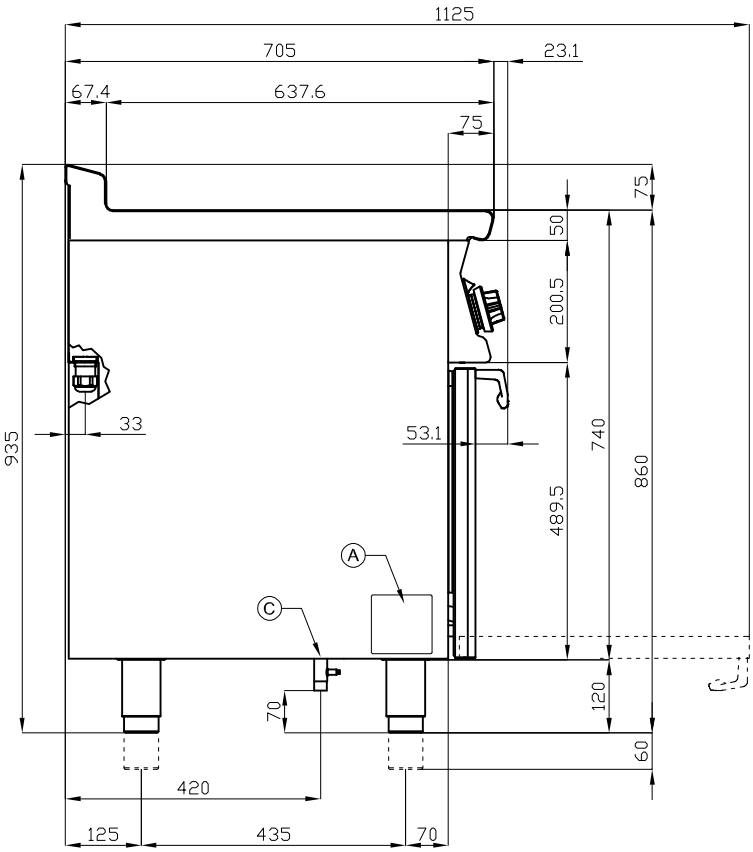

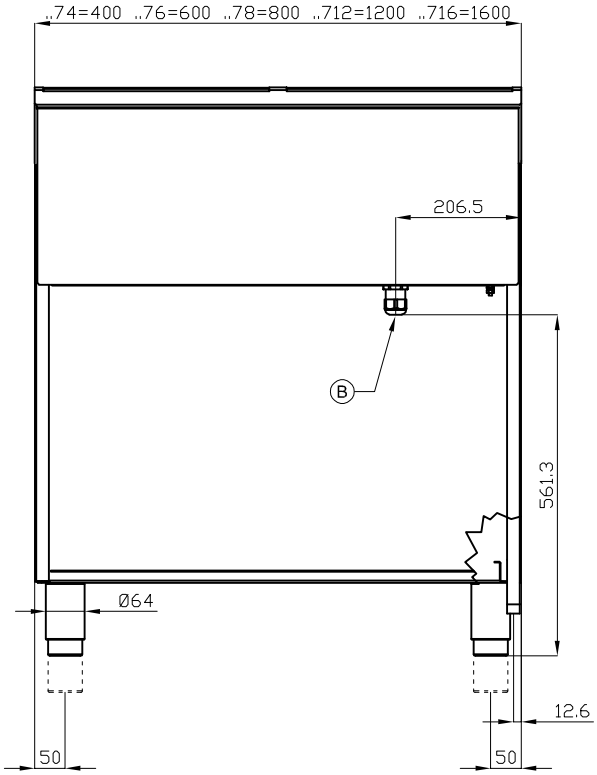

A	Data plate
C	Gas connection ISO 7-1 3/4" M

We reserve the right to alter specifications without notice.