DATA SHEET

Lotus CF4-98G 4 Burner Gas Range with Oven

09680850 90-SERIES

☐ LPG ☐ NAT

LOTUS
ITALIAN CULINARY ART

View 3D

Build

- Heavy-duty construction made from premium CrNi 18/10 AISI 304 stainless steel with Scotch-Brite satin finish. It features a 2mm thick worktop, rounded edges, chrome details, and a rear splashback.
- Waterproof chromed knobs with an IPX5 waterproof rating.
- Burners with pilot light ignition and thermocouple safety valve. Flame failure as standard.
- Powerful 4 x 36 Mj/hr large modulating burners with variable flame control.
- Heavy guage cast iron plated burner body and caps for durability and longevity. This unique design also incorporates a pilot protection which reduces the likelihood of any blocking.

  Trivets are constructed from heavy-gauge cast iron ensure easy pan movement, durability, and hygiene.
- Removable liquid and grease collectors under the burners ensure easy cleaning.
- Powerful 27 Mj/hr gas bottom oven with precise temperature control between 150°C and 300°C
- The oven accommodates 4 x 2/1 GN rack and include one heavy-duty stainless steel 2/1 GN rack (65cm x 71cm) as standard.

  Oven racks include a quick disconnect fitting, allowing all the oven racks to be removed in seconds for a deep clean.
- The oven chamber is constructed from heavy-gauge AISI 304 stainless steel with rounded corners for ease of cleaning and hygiene.

  Heavy gauge fully insulated stainless steel drop down door with reinforced hinges and springs.
- The oven is designed for easy maintenance and serviceability, with all parts accessible by simply removing the liquid collectors to reach the burners and pilots, as well as the front control panel.

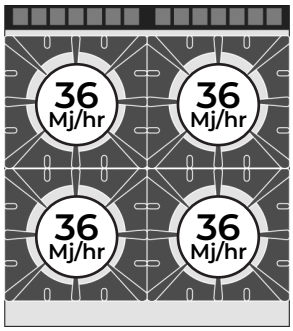

Technical specifications

External Size

External Width	800mm
External Depth	900mm
External Height	900mm

Weight

Net weight	
Package weight	166kg

Technical Features

Burner[s] Power	4 x 36 Mj/hr
Oven Power	27 Mj/hr
Oven Temp	150°C - 300°C
Oven Capacity	4 x 2/1 (650 x 710)
Pilots	Yes
Flame Failure	Yes

Connection requirements Gas

Gas Consumption	171 Mj/hr
Gas Connection	3/4" M GAS

Warranty

2 Year Warranty	2 years parts and labour

**Subject to a prevanttitive maintence plan*

Options

☐

Smooth griddle plate for cast iron grid	
Model: PLF/9	SKU: 09590401

☐

Grooved griddle plate for cast iron grid	
Model: PRF/9	SKU: 09590403

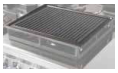

DATA SHEET

Lotus CF4-98G 4 Burner Gas Range with Oven

09680850 90-SERIES

☐ LPG ☐ NAT

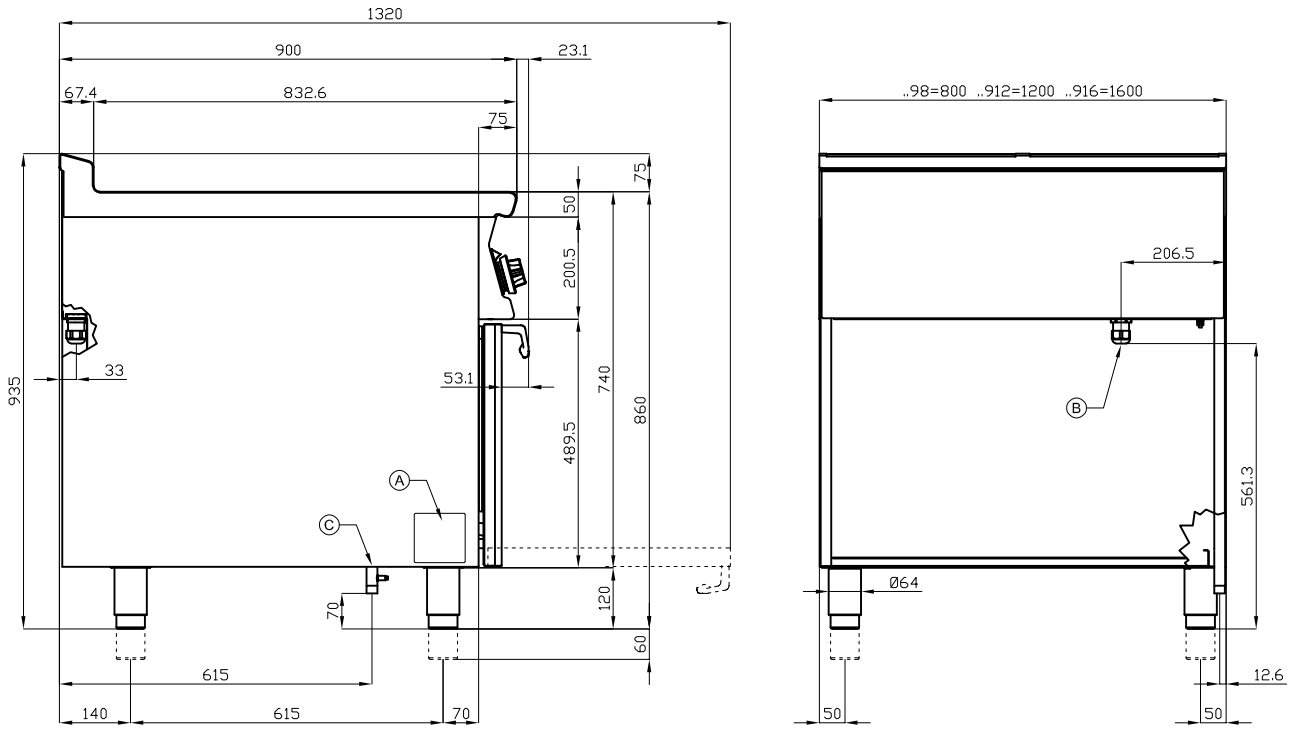

A	Data plate
C	Gas connection ISO 7-1 3/4" M

We reserve the right to alter specifications without notice.